# SECTION DI
# DRIVER INFORMATION SYSTEM

## CONTENTS

**PRECAUTIONS** .......................................................... **3**
Precautions for Supplemental Restraint System (SRS) “AIR BAG” and “SEAT BELT PRE-TENSIONER” .......................................................... 3
Wiring Diagrams and Trouble Diagnosis ................. 3
**COMBINATION METERS** .......................................... **4**
System Description ................................................. 4
UNIFIED METER CONTROL UNIT ..................... 4
POWER SUPPLY AND GROUND CIRCUIT ....... 4
ODO/TRIP METER, CLOCK AND AMBIENT TEMPERATURE INDICATOR .............................. 4
SPEEDOMETER .................................................. 4
TACHOMETER .................................................... 5
WATER TEMPERATURE GAUGE ....................... 5
FUEL GAUGE ...................................................... 5
AMBIENT TEMPERATURE INDICATOR ............. 5
CAN Communication ............................................... 6
SYSTEM DESCRIPTION ..................................... 6
CAN COMMUNICATION UNIT ............................ 6
Arrangement of Combination Meter ........................ 7
Component Parts and Harness Connector Location .... 8
Schematic ............................................................... 9
Wiring Diagram — METER — ............................... 10
AWD MODELS .................................................. 10
2WD MODELS .................................................. 12
Terminals and Reference Value for Combination Meter .................................................................... 14
Self-Diagnosis Mode of Combination Meter .......... 14
SELF-DIAGNOSIS FUNCTION ......................... 14
OPERATION PROCEDURE .............................. 14
Trouble Diagnosis ................................................. 15
HOW TO PROCEED WITH TROUBLE DIAGNOSIS .................................................................... 15
PRELIMINARY CHECK .................................... 15
SYMPTOM CHART ........................................... 16
Power Supply and Ground Circuit Inspection ....... 16
Vehicle Speed Signal Inspection (With VDC) ........ 17
Vehicle Speed Signal Inspection (Without VDC) ... 17
Engine Speed Signal Inspection ........................... 17
Engine Coolant Temperature Signal Inspection .... 18
Fuel Level Sensor Inspection ................................ 18
The Fuel Gauge Pointer Fluctuates, Indicator Wrong Value or Varies .......................................... 19
The Fuel Gauge Does Not Move to FULL Position .. 20
Ambient Temperature Signal Inspection [Without Auto A/C] .............................................................. 20
Ambient Temperature Signal Inspection [With Auto A/C] ....................................................................... 22
Electrical Components Inspection ......................... 23
FUEL LEVEL SENSOR UNIT CHECK ............... 23
AMBIENT SENSOR CHECK ............................. 23
Removal and Installation for Combination Meter ... 24
REMOVAL .......................................................... 24
INSTALLATION ................................................. 24
Disassembly and Assembly for Combination Meter .. 24
DISASSEMBLY .................................................. 24
ASSEMBLY ........................................................ 24
**WARNING LAMPS** .................................................. **25**
Schematic ............................................................. 25
Wiring Diagram — WARN — ................................ 26
AWD MODELS ................................................... 26
2WD MODELS ................................................... 32
Electrical Components Inspection ......................... 38
OIL PRESSURE SWITCH CHECK .................... 38
DIODE CHECK .................................................. 38
**A/T INDICATOR** ...................................................... **39**
Wiring Diagram — AT/IND — ............................... 39
AWD MODELS ................................................... 39
2WD MODELS ................................................... 40
A/T Indicator Does Not Illuminate .......................... 41
**WARNING CHIME** .................................................... **42**
System Description ................................................ 42
POWER SUPPLY AND GROUND CIRCUIT ...... 42
IGNITION KEY WARNING CHIME .................... 42
LIGHT WARNING CHIME ................................. 42
SEAT BELT WARNING CHIME ......................... 42
Component Parts and Harness Connector Location .. 43
Schematic ............................................................. 44
Wiring Diagram — CHIME — ............................... 45
Terminals and Reference Value for Smart Entrance

Control Unit ............................................................ 48
Trouble Diagnosis .................................................. 48
HOW TO PROCEED WITH TROUBLE DIAGNOSIS ...................................................................... 48
SYMPTOM CHART ............................................ 48
Power Supply and Ground Circuit Inspection ........ 48
Front Door Switch (Driver Side) Inspection ........... 49
Lighting Switch Input Signal Inspection ................. 51
Key Switch Insert Signal Inspection ....................... 51
Seat Belt Buckle Switch Input Signal Inspection [Without Power Seat] ............................................. 52
Seat Belt Buckle Switch Input Signal Inspection [With Power Seat] .................................................. 54
**CLOCK ................................................................... 56**
Wiring Diagram — CLOCK — ................................ 56

# PRECAUTIONS

PFP:00011

## Precautions for Supplemental Restraint System (SRS) “AIR BAG” and “SEAT BELT PRE-TENSIONER”

AKS00B9V

The Supplemental Restraint System such as “AIR BAG” and “SEAT BELT PRE-TENSIONER”, used along with a front seat belt, helps to reduce the risk or severity of injury to the driver and front passenger for certain types of collision. Information necessary to service the system safely is included in the SRS and SB section of this Service Manual.

**WARNING:**

- **To avoid rendering the SRS inoperative, which could increase the risk of personal injury or death in the event of a collision which would result in air bag inflation, all maintenance must be performed by an authorized NISSAN/INFINITI dealer.**
- **Improper maintenance, including incorrect removal and installation of the SRS, can lead to personal injury caused by unintentional activation of the system. For removal of Spiral Cable and Air Bag Module, see the SRS section.**
- **Do not use electrical test equipment on any circuit related to the SRS unless instructed to in this Service Manual. SRS wiring harnesses can be identified by yellow and/or orange harnesses or harness connectors.**

## Wiring Diagrams and Trouble Diagnosis

AKS00B9W

When reading wiring diagrams, refer to the following:

- GI-14, "How to Read Wiring Diagrams" in GI section
- PG-2, "POWER SUPPLY ROUTING" for power distribution circuit in PG section

When performing trouble diagnosis, refer to the following:

- GI-10, "HOW TO FOLLOW TEST GROUPS IN TROUBLE DIAGNOSES" in GI section
- GI-26, "How to Perform Efficient Diagnosis for an Electrical Incident" in GI section

# COMBINATION METERS

PFP:24814

## System Description

AKS00B9X

### UNIFIED METER CONTROL UNIT

- Speedometer, odo/trip meter, tachometer, fuel gauge and water temperature gauge are controlled by the unified meter control unit, which is built into the combination meter.
- Digital meter is adopted for odo/trip meter*.
  *The record of the odo meter is kept even if the battery cable is disconnected. The record of the trip meter is erased when the battery cable is disconnected.
- Meter/gauge and odo/trip meter segments can be checked in diagnosis mode.

### POWER SUPPLY AND GROUND CIRCUIT

Power is supplied at all times

- through 10 A fuse [No. 28, located in the fuse block (J/B)]
- to combination meter terminal 1.

With the ignition switch in the ON or START position, power is supplied

- through 10 A fuse [No. 11, located in the fuse block (J/B)]
- to combination meter terminal 2.

Ground is supplied

- to combination meter terminal 21
- through grounds M27 and M70.

### ODO/TRIP METER, CLOCK AND AMBIENT TEMPERATURE INDICATOR

- The vehicle speed signal and the memory signals from the meter memory circuit are processed by the combination meter and the mileage is displayed.
- Ambient temperature indicator indicates signal from ambient sensor processed by the combination meter.

### How to Change The Display

Depressing the odo/trip meter switch toggles the mode in the following order.

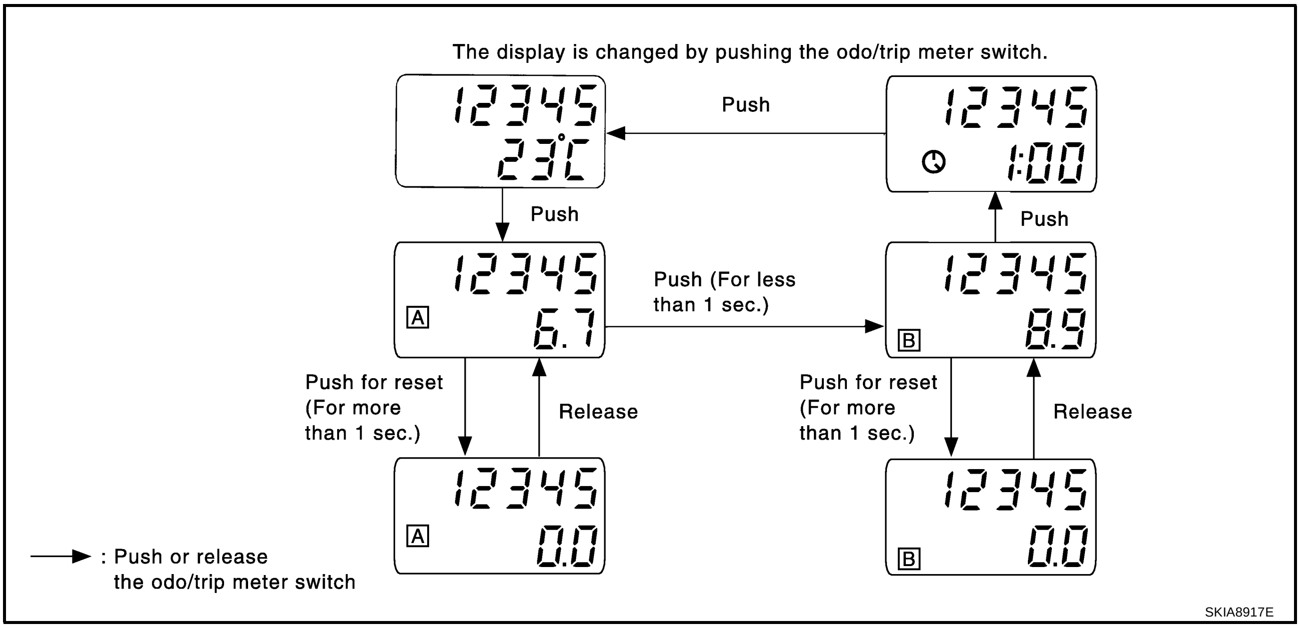


- The odo/trip meter display mode toggling and trip display resetting can be identified by the amount of time that elapses from pressing the odo/trip meter switch to releasing it.
- When resetting with trip A displayed, only trip A display is reset. (The same way for trip B.)

### SPEEDOMETER

VDC/TCS/ABS control unit [with VDC] or ABS actuator and electric unit (control unit) [without VDC] provides a vehicle speed signal to the combination meter for the speedometer with CAN communication line.

## TACHOMETER

The tachometer indicates engine speed in revolutions per minute (rpm).
ECM provides an engine speed signal to combination meter for tachometer with CAN communication line.

## WATER TEMPERATURE GAUGE

The water temperature gauge indicates the engine coolant temperature.
ECM provides an engine coolant temperature signal to combination meter for water temperature gauge with CAN communication line.

## FUEL GAUGE

The fuel gauge indicates the approximate fuel level in the fuel tank.
The fuel gauge is regulated by a variable ground signal supplied

- from grounds M27 and M70
- through terminals 1 and 4 of the fuel level sensor unit
- through terminals 3 and 1 of the sub fuel level sensor unit and
- to combination meter terminal 8 for the fuel gauge.

## AMBIENT TEMPERATURE INDICATOR

The ambient temperature is indicated by the signal from ambient sensor.
Combination meter inputs voltage conversed from resistance which ambient sensor detects.
Indication range is between -30 and 55 °C (-22 and 131 °F). When ambient temperature is less than -30 °C (-22 °F) or more than 55 °C (131 °F), display shows "--- °C". When indicated temperature becomes less than 3 °C (37 °F), ambient temperature indicator flashes as a sign of warning.

### Without Auto A/C

Power is supplied

- through combination meter terminal 27
- to ambient sensor terminal 1.

Ground is supplied

- to combination meter terminal 28
- through ambient sensor terminal 2.

Signal is supplied

- through ambient sensor terminal 1
- to combination meter terminal 27.

### With Auto A/C

Power is supplied

- through A/C auto amp. terminal 9
- to ambient sensor terminal 1.

Ground is supplied

- to combination meter terminal 28 and A/C auto amp. terminal 24
- through ambient sensor terminal 2.

And combination meter receives ambient sensor signal from ambient sensor

- through ambient sensor terminal 1
- to combination meter terminal 27.

**NOTE:**
Combination meter distinguishes whether or not combination meter terminal 29 receives voltage (Auto A/C recognition signal) from A/C auto amp. terminal 28. If the terminal receives, combination meter discerns as auto A/C.

### Indication When Turning Ignition Switch OFF

- In a case that temperature detected by ambient sensor is higher than indicated temperature before turning ignition switch off.
  - In a case of more than 3.5 hours after turning ignition switch off, temperature detected by ambient sensor is indicated when turning ignition switch on.

- In a case of less then 3.5 hours after turning ignition switch off, temperature at the time of turning ignition switch off is indicated.
- In a case that temperature detected by ambient sensor is lower than indicated temperature before turning ignition switch off.
  - Temperature detected by ambient sensor is indicated when turning ignition switch on.

### Indication During Running

Though temperature detected by ambient sensor temporarily changed, indicating temperature continentally indicates.

- In a case that temperature detected by ambient sensor is higher than indicated temperature.
  - If vehicle speed is more than 20 km/h (13 MPH), elevation of indicating temperature is limited according to the speed until temperature detected by ambient sensor is indicated.

    **NOTE:**
    Vehicle speed 20 km/h (13 MPH): 256 sec., 25 km/h (16 MPH): 238 sec., 35 km/h (22 MPH): 200 sec., 50 km/h (31 MPH): 144 sec., 65 km/h (40 MPH): 88 sec., more than 80 km/h (50 MPH): 32 sec.
  - If vehicle speed is more than 20 km/h (13 MPH), and that temperature detected by ambient sensor becomes 8 °C (46 °F) more than indicating temperature, indicating temperature will be elevated unit the degree becomes same as temperature detected by ambient sensor with limiting elevation of indicating temperature 1 °C par a minute.
  - If vehicle speed is less than 20 km/h (13 MPH), indicating temperature is continually kept.
- In a case that temperature detected by ambient sensor is lower than indicated temperature.
  - Temperature detected by ambient sensor is indicated during running.

## CAN Communication

*AKS00BQ7*

### SYSTEM DESCRIPTION

CAN (Controller Area Network) is a serial communication line for real time application. It is an on-vehicle multiplex communication line with high data communication speed and excellent error detection ability. Many electronic control units are equipped onto a vehicle, and each control unit shares information and links with other control units during operation (not independent). In CAN communication, control units are connected with 2 communication lines (CAN H line, CAN L line) allowing a high rate of information transmission with less wiring. Each control unit transmits/receives data but selectively reads required data only.

### CAN COMMUNICATION UNIT

Refer to LAN-16, "CAN Communication Unit" in “LAN SYSTEM”.

## Arrangement of Combination Meter

AKS00BA1

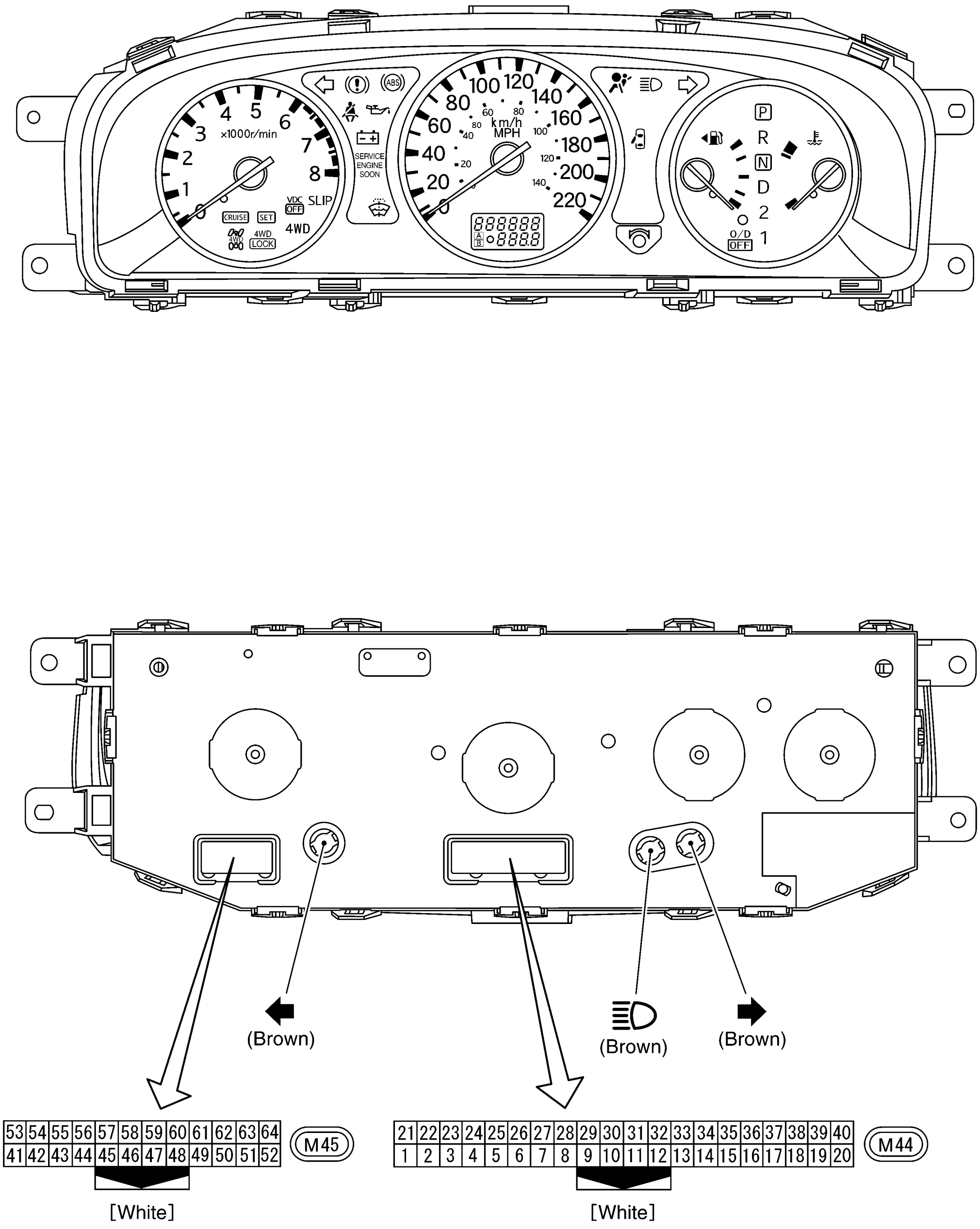


| Bulb socket color | Bulb wattage |
|---|---|
| Brown | 1.4W |

( ) : Bulb socket color

SKIB0505E

## Component Parts and Harness Connector Location

AKS00BA0

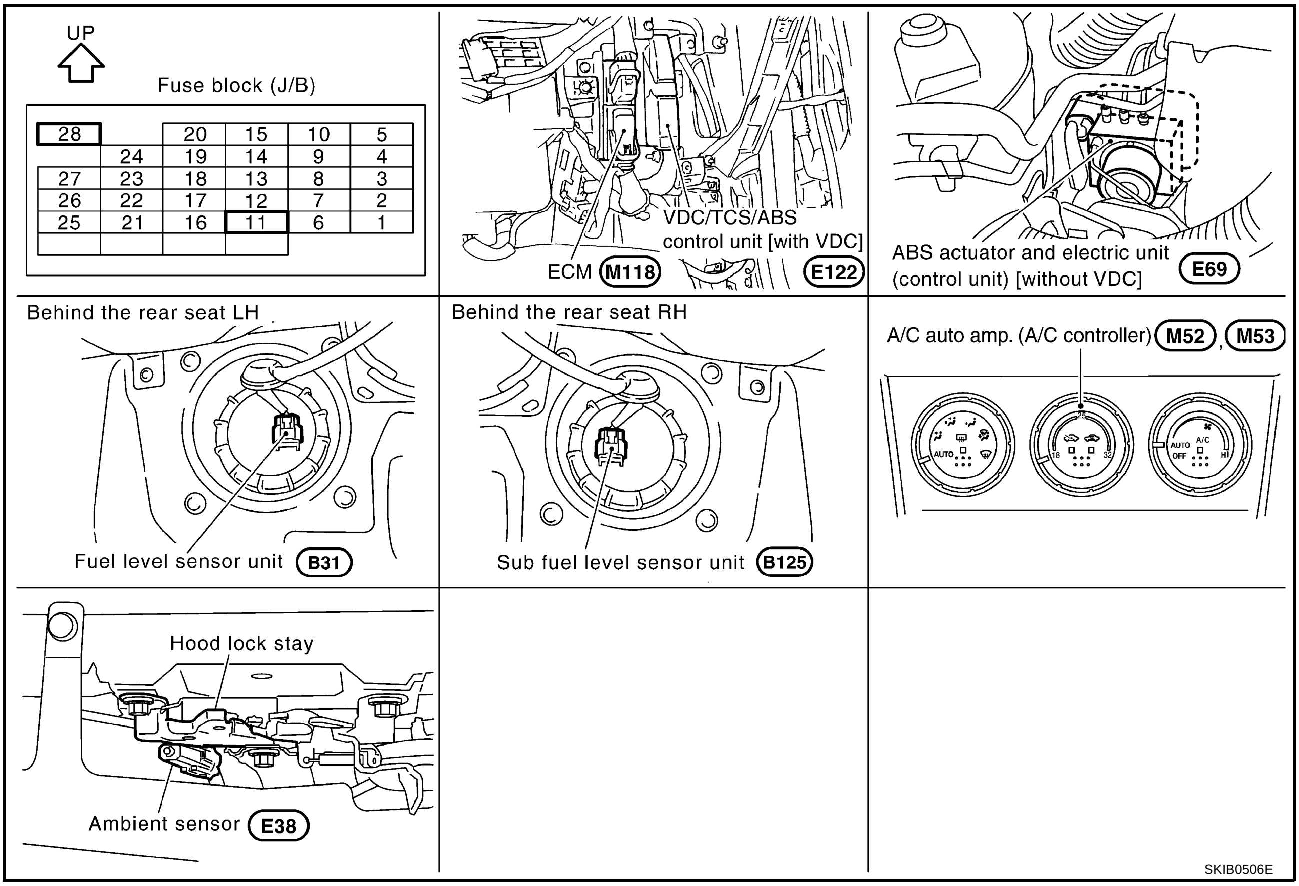

## Schematic

AKS00BA2

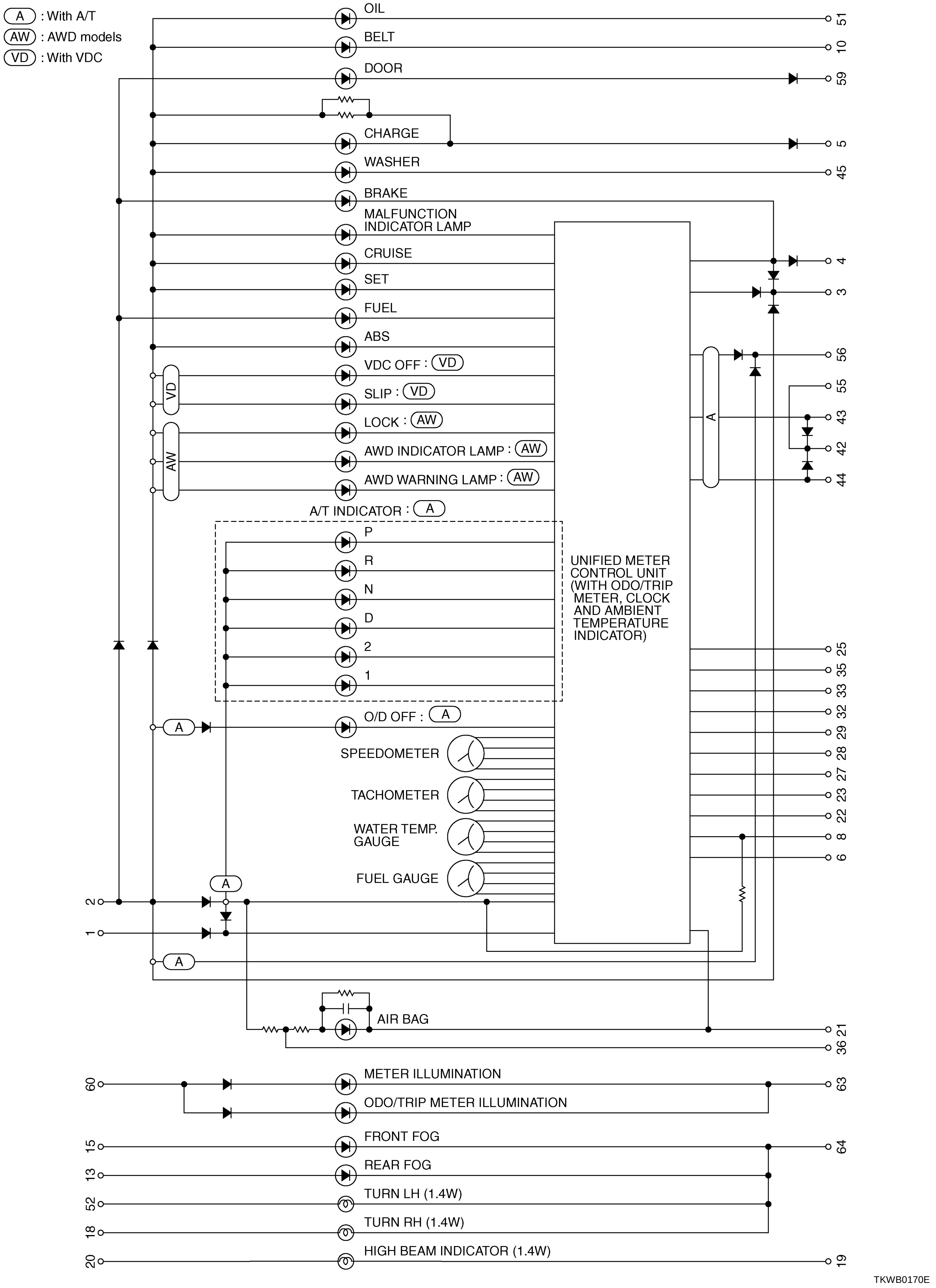

## Wiring Diagram — METER —
### AWD MODELS

AKS00BA3

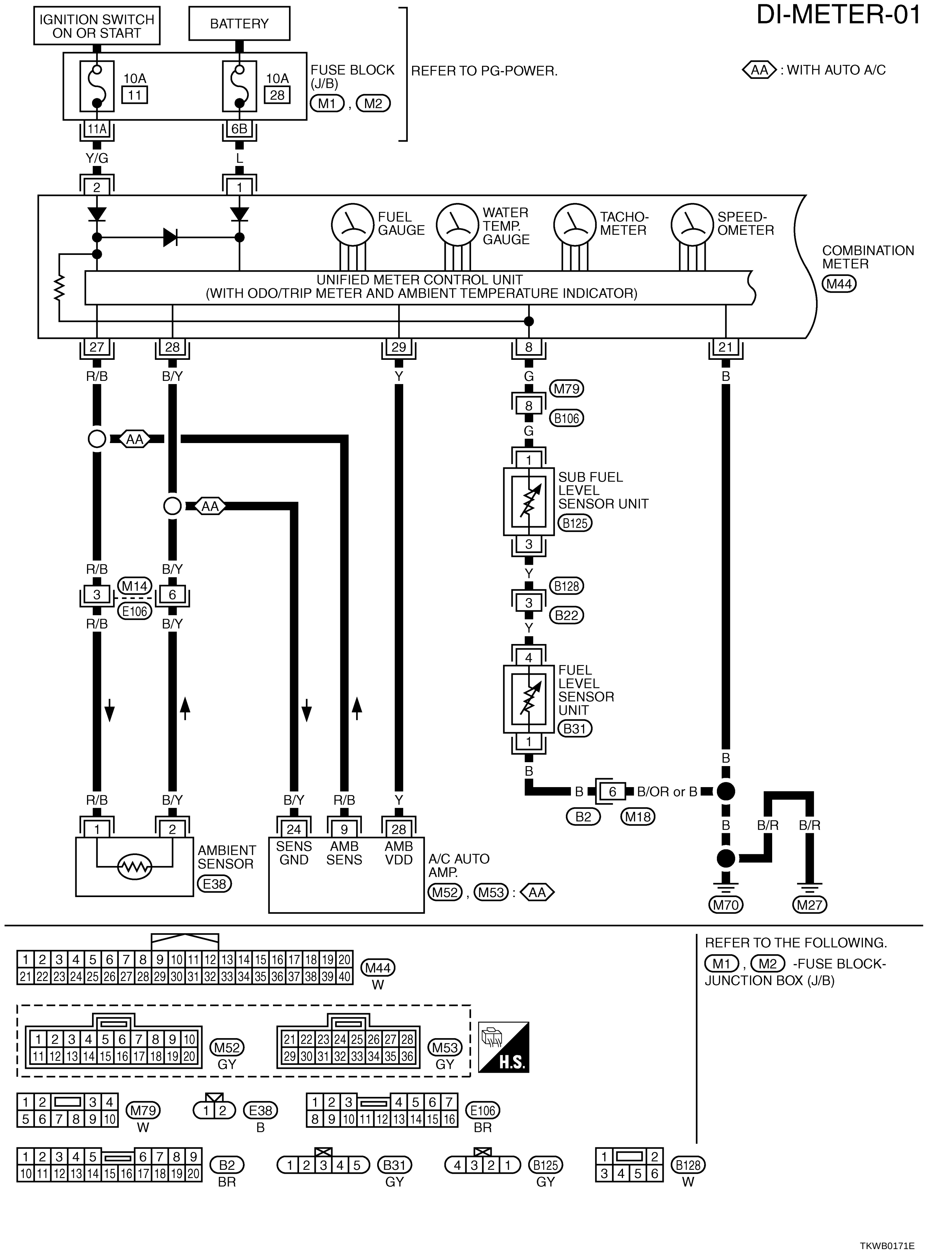

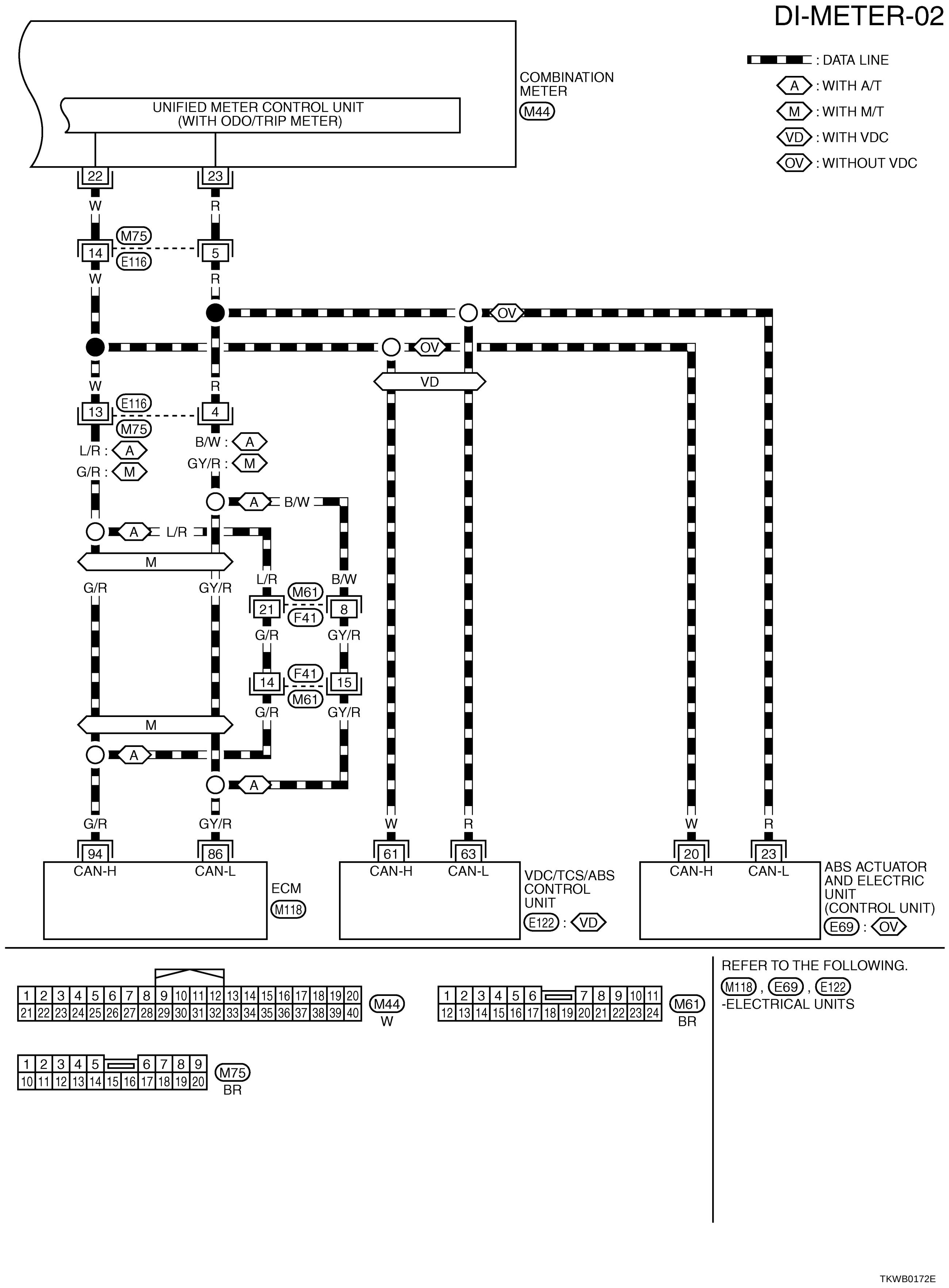


A
B
C
D
E
F
G
H
I
J
DI
L
M

## 2WD MODELS

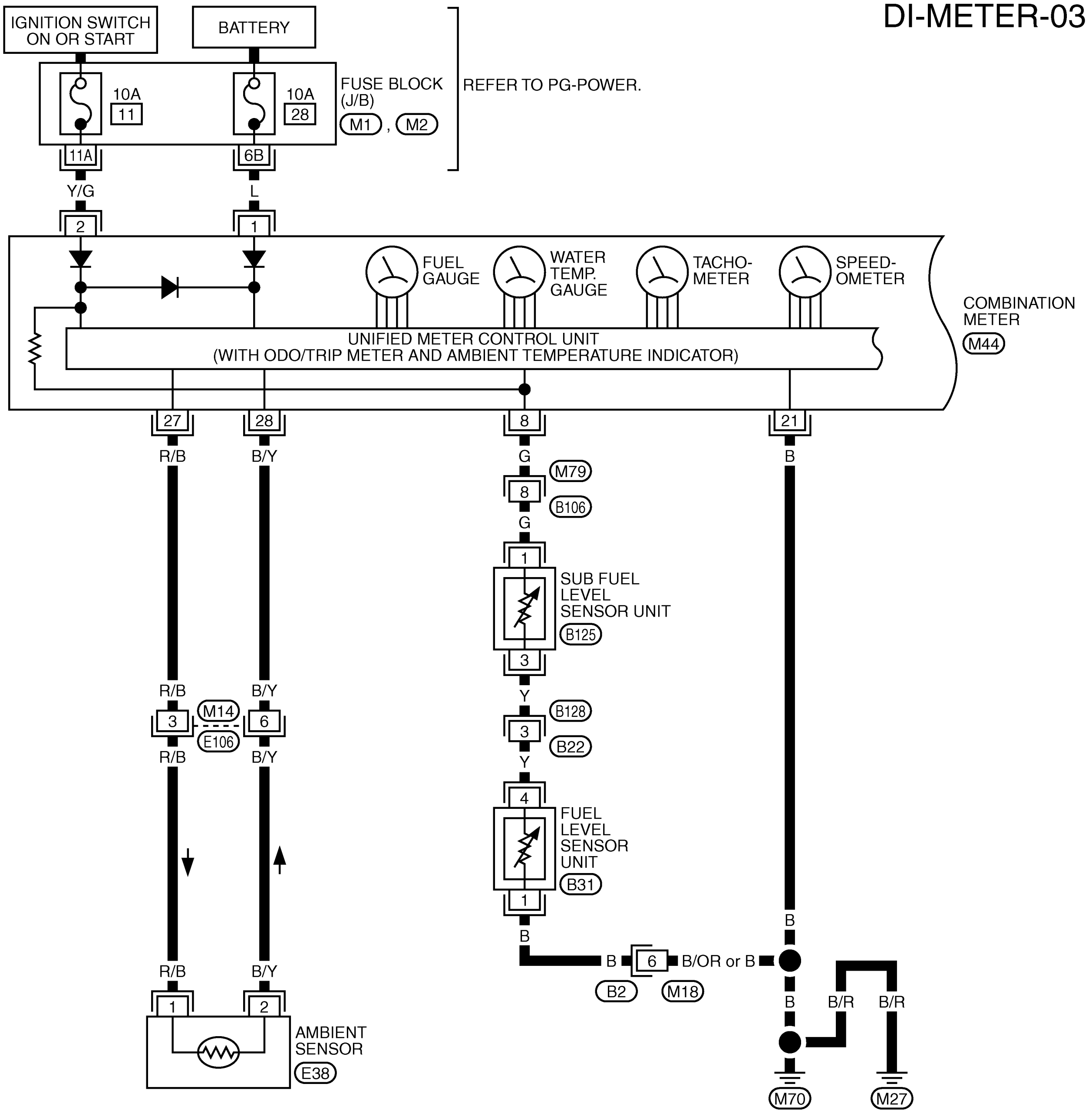


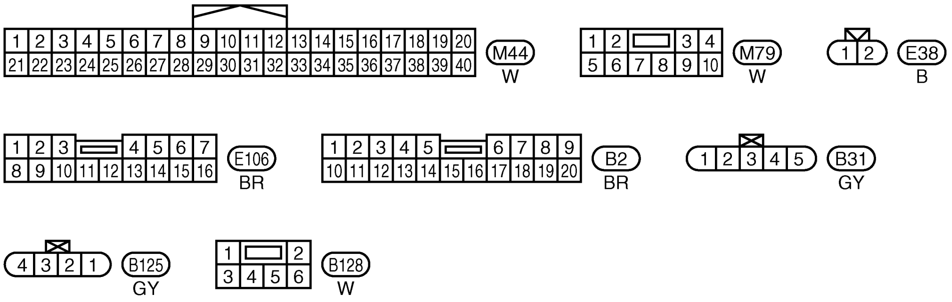


REFER TO THE FOLLOWING.
M1, M2 -FUSE BLOCK-JUNCTION BOX (J/B)

TKWB0173E

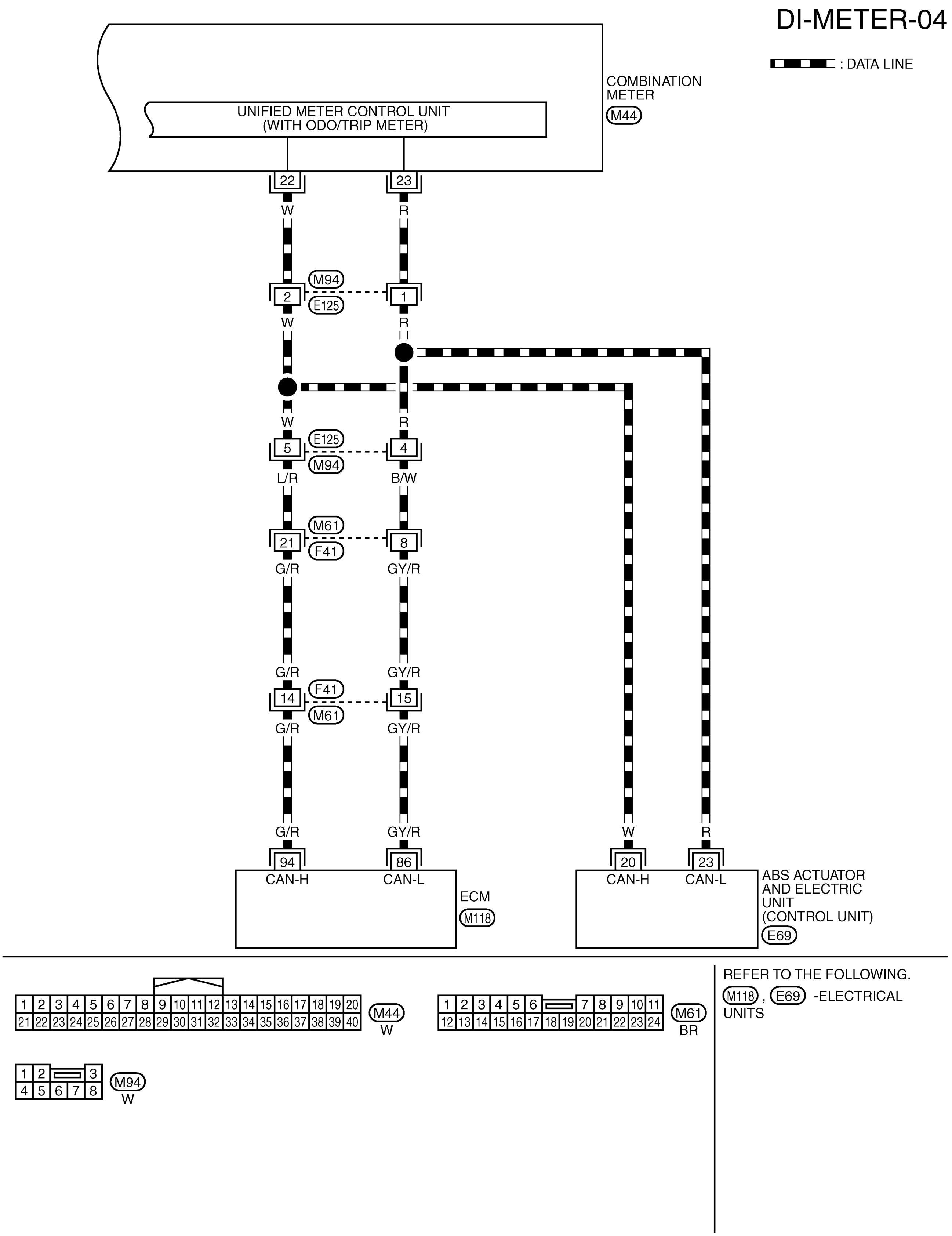

DI-METER-04
: DATA LINE
COMBINATION METER
M44
UNIFIED METER CONTROL UNIT (WITH ODO/TRIP METER)
22
23
W
R
M94
E125
2
1
E125
M94
5
4
L/R
B/W
M61
F41
21
8
G/R
GY/R
F41
M61
14
15
94
86
CAN-H
CAN-L
ECM
M118
20
23
ABS ACTUATOR AND ELECTRIC UNIT (CONTROL UNIT)
E69
M44
W
M61
BR
M94
W
REFER TO THE FOLLOWING.
M118, E69 -ELECTRICAL UNITS
TKWB0174E

## Terminals and Reference Value for Combination Meter

AKS00BA6

| Terminal No. | Wire Color | Item | Condition | | Reference Value |
|---|---|---|---|---|---|
| | | | Ignition switch | Operation or condition | |
| 1 | L | Battery power supply | OFF | — | Battery voltage |
| 2 | Y/G | Ignition switch (ON) | ON | — | Battery voltage |
| 8 | G | Fuel level sensor signal | — | — | Refer to DI-23, "FUEL LEVEL SENSOR UNIT CHECK" . |
| 21 | B | Ground | ON | — | Approx. 0 V |
| 22 | W | CAN-H | — | — | — |
| 23 | R | CAN-L | — | — | — |
| 27 | R/B | Ambient sensor signal | — | — | Refer to DI-23, "AMBIENT SENSOR CHECK" |
| 28 | B/Y | Ambient sensor ground | — | — | — |
| 29*1 | Y | Auto A/C recognition signal | ON | — | Approx. 5 V |

**NOTE:**
*1:With auto A/C

## Self-Diagnosis Mode of Combination Meter

AKS00BA7

### SELF-DIAGNOSIS FUNCTION

- Odo/trip meter segment operation can be checked in self-diagnosis mode.
- Meters/gauges can be checked in self-diagnosis mode.

### OPERATION PROCEDURE

1. Turn the ignition switch ON, and switch the odo/trip meter to “trip A” or “trip B”.
   **NOTE:**
   If the diagnosis function is activated with the trip meter A displayed, the mileage on the trip meter A will indicate 0.0 mile, but the actual trip mileage will be retained. (The same way for trip B.)
2. Turn ignition switch OFF.
3. While pushing the odo/trip meter switch, turn ignition switch ON again.
4. Make sure that the trip meter displays “0.0”.
5. Push the odo/trip meter switch at least 3 times. (Within 7 seconds after the ignition switch is turned ON.)
6. All the segments on the odo/trip meter illuminate, and simultaneously the low-fuel warning lamp indicator illuminates. At this time, the unified meter control unit is turned to diagnosis mode.
   **NOTE:**
   If any of the segments is not displayed, replace the combination meter.

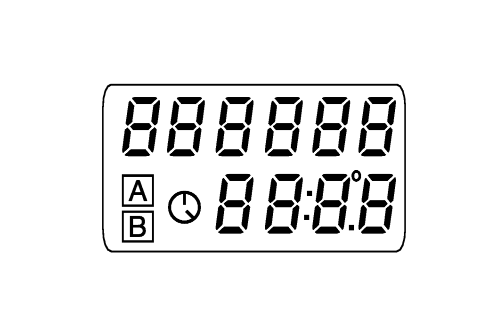


SKIA8920E

7. Push the odo/trip meter switch. Each meter/gauge should indicate as shown in the figure while pushing odo/trip meter switch. (At this time, the low-fuel warning lamp goes off.)

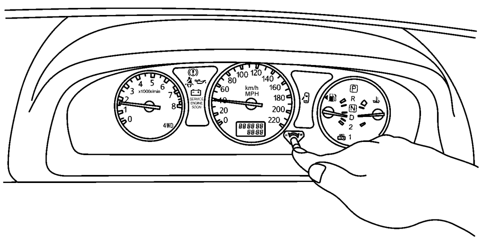

SKIB0507E

## Trouble Diagnosis

AKS00BQ6

### HOW TO PROCEED WITH TROUBLE DIAGNOSIS

1. Confirm the symptom or customer complaint.
2. Perform preliminary check. Refer to DI-15, "PRELIMINARY CHECK" .
3. According to the trouble diagnosis chart, repair or replace the cause of symptom. Refer to DI-16, "SYMPTOM CHART" .
4. Does the meter operate normally? If so, GO TO 5. If not, GO TO 2.
5. INSPECTION END

### PRELIMINARY CHECK

#### 1. CHECK WARNING LAMP ILLUMINATION

1. Turn ignition switch ON.
2. Make sure that warning lamp (such as MIL and oil pressure warning lamp) illuminate.

Does warning lamp illuminate?

YES >> GO TO 2.
NO >> GO TO 3.

#### 2. CHECK SELF-DIAGNOSIS OPERATION

Perform combination meter self-diagnosis. Refer to DI-14, "SELF-DIAGNOSIS FUNCTION" .

Does self-diagnosis function operate?

YES >> GO TO 4.
NO >> GO TO 3.

#### 3. CHECK POWER SUPPLY AND GROUND CIRCUIT

Check power supply and ground circuit. Refer to DI-16, "Power Supply and Ground Circuit Inspection" .

OK or NG

OK >> Replace combination meter.
NG >> Repair as need.

#### 4. CHECK ODO/TRIP METER OPERATION

Check segment display status of odo/trip meter.

Is the display normal?

YES >> GO TO 5.
NO >> Replace combination meter.

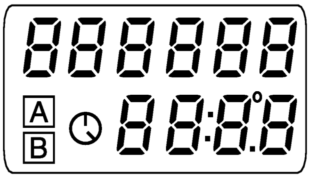


SKIA8920E

## 5. CHECK LOW-FUEL WARNING LAMP ILLUMINATION

During inspection of low-fuel warning lamp, confirm illumination of low-fuel warning lamp.

| Condition of odo/trip meter switch | Fuel warning lamp |
|---|---|
| Pushed | Does not illuminate. |
| Released | Illuminates. |

OK or NG

OK >> GO TO 6.
NG >> Replace combination meter.

## 6. CHECK METER CIRCUIT

Check indication of each meter/gauge in self-diagnosis mode.

OK or NG

OK >> INSPECTION END
NG >> Replace combination meter.

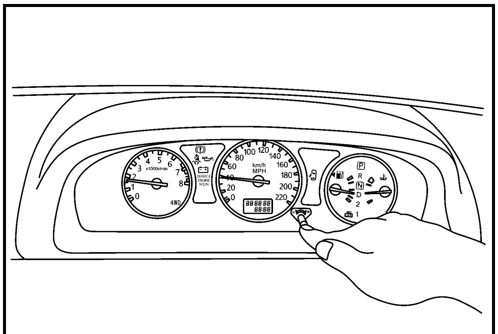

SKIB0507E

## SYMPTOM CHART

| Symptom | Possible cause |
|---|---|
| Indication is irregular for the speedometer and odo/trip meter. | Refer to DI-17, "Vehicle Speed Signal Inspection (With VDC)" or DI-17, "Vehicle Speed Signal Inspection (Without VDC)" . |
| Tachometer indication is malfunction. | Refer to DI-17, "Engine Speed Signal Inspection" . |
| Water temperature gauge indication is malfunction. | Refer to DI-18, "Engine Coolant Temperature Signal Inspection" . |
| Low-fuel warning lamp indication is irregular. | Refer to DI-18, "Fuel Level Sensor Inspection" . |
| Fuel gauge indication is malfunction. | |
| Ambient temperature indicator is malfunction. | Refer to DI-20, "Ambient Temperature Signal Inspection [Without Auto A/C]" or DI-22, "Ambient Temperature Signal Inspection [With Auto A/C]" . |
| A/T position indicator is malfunction. | Refer to DI-41, "A/T Indicator Does Not Illuminate" . |

# Power Supply and Ground Circuit Inspection

AKS00BAA

## 1. CHECK FUSE

Check for blown combination meter fuses.

| Unit | Power source | Fuse No. |
|---|---|---|
| Combination meter | Battery | 28 |
| | Ignition switch (ON) | 11 |

OK or NG

OK >> GO TO 2.
NG >> If fuse is blown, be sure to eliminate cause of malfunction before installing new fuse. Refer to PG-49, "FUSE BLOCK - JUNCTION BOX (J/B)" .

## 2. CHECK POWER SUPPLY CIRCUIT

Check voltage between combination meter and ground.

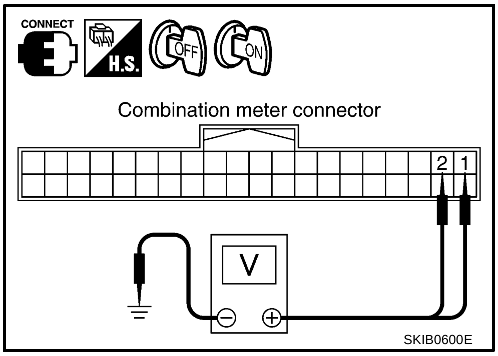


| Terminals | | | Ignition switch position | |
|---|---|---|---|---|
| (+) | | (–) | OFF | ON |
| Connector | Terminal (Wire color) | | | |
| M44 | 2 (Y/G) | Ground | 0 V | Battery voltage |
| | 1 (L) | | Battery voltage | Battery voltage |

OK or NG

OK >> GO TO 3.
NG >> Check harness between combination meter and fuse.

## 3. CHECK GROUND CIRCUIT

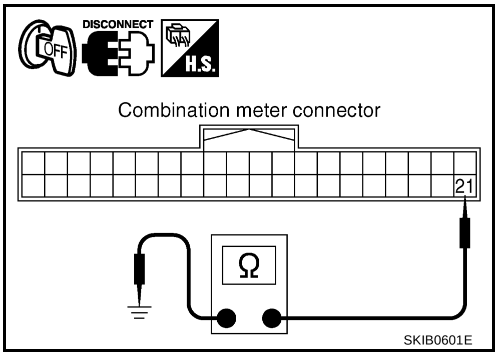


1. Turn ignition switch OFF.
2. Disconnect combination meter connector.
3. Check continuity between combination meter harness connector M44 terminal 21 (B) and ground.

**21 (B) – Ground : Continuity should exist.**

OK or NG

OK >> Power supply and ground circuit is OK.
NG >> Repair ground harness.

# Vehicle Speed Signal Inspection (With VDC)

AKS00BLQ

## 1. CHECK VDC/TCS/ABS CONTROL UNIT SELF-DIAGNOSIS

Preform VDC/TCS/ABS control unit self-diagnosis. Refer to BRC-61, "CONSULT-II Functions" .

OK or NG

OK >> Replace combination meter.
NG >> Check applicable parts, repair or replace corresponding parts.

# Vehicle Speed Signal Inspection (Without VDC)

AKS00BAG

## 1. CHECK ABS ACTUATOR AND ELECTRIC UNIT SELF-DIAGNOSIS

Preform ABS actuator and electric unit self-diagnosis. Refer to BRC-19, "CONSULT-II Functions" .

OK or NG

OK >> Replace combination meter.
NG >> Check applicable parts, repair or replace corresponding parts.

# Engine Speed Signal Inspection

AKS00BAE

## 1. CHECK ECM SELF-DIAGNOSIS

Perform ECM self-diagnosis. Refer to EC-123, "CONSULT-II Function (ENGINE)" .

OK or NG

OK >> Replace combination meter.
NG >> Perform “Diagnostic Procedure” in displayed DTC.

## Engine Coolant Temperature Signal Inspection

AKS00BAF

### 1. CHECK ECM SELF-DIAGNOSIS

Perform ECM self-diagnosis. Refer to EC-123, "CONSULT-II Function (ENGINE)" .

OK or NG

OK >> Replace combination meter.
NG >> Perform “Diagnostic Procedure” in displayed DTC.

## Fuel Level Sensor Inspection

AKS00BAC

**NOTE:**
The following symptoms are not malfunction.

FUEL GAUGE

- Depending on vehicle posture or driving circumstances, fuel level in tank varies, and the pointer may fluctuate.
- If the vehicle is fueled with ignition switch ON, the pointer moves slowly.

LOW-FUEL WARNING LAMP

- Depending on vehicle posture or driving circumstances, fuel level in tank varies, and warning lamp ON timing may change.

### 1. CHECK HARNESS CONNECTOR

Check combination meter and fuel level sensor unit terminals (meter side, unit side, harness side) for looseness or bent terminals.

OK or NG

OK >> GO TO 2.
NG >> Repair terminal or connector.

### 2. CHECK COMBINATION METER CIRCUIT

1. Turn ignition switch OFF.
2. Disconnect combination meter connector and sub fuel level sensor unit connector.
3. Check continuity between combination meter harness connector M44 terminal 8 (G) and sub fuel level sensor unit harness connector B125 terminal 1 (G).

   **8 (G) – 1 (G) : Continuity should exist.**

4. Check continuity between combination meter harness connector M44 terminal 8 (G) and ground.

   **8 (G) – Ground : Continuity should not exist.**

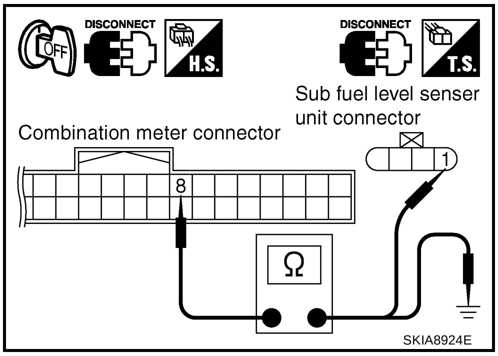


OK or NG

OK >> GO TO 3.
NG >> Repair harness or connector.

## 3. CHECK FUEL LEVEL SENSOR CIRCUIT

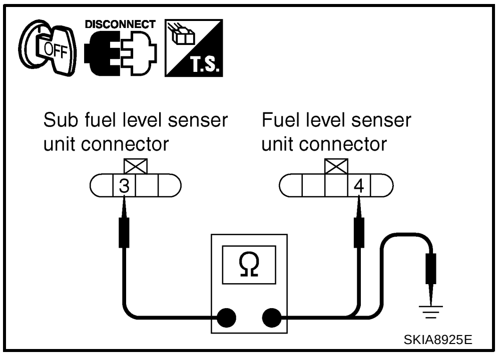


1. Disconnect fuel level sensor unit connector.
2. Check continuity between sub fuel level sensor unit harness connector B125 terminal 3 (Y) and fuel level sensor unit harness connector B31 terminal 4 (Y).

**3 (Y) – 4 (Y) : Continuity should exist.**

3. Check continuity between sub fuel level sensor unit harness connector B125 terminal 3 (Y) and ground.

**3 (Y) – Ground : Continuity should not exist.**

OK or NG

OK >> GO TO 4.
NG >> Repair harness or connector.

## 4. CHECK GROUND CIRCUIT

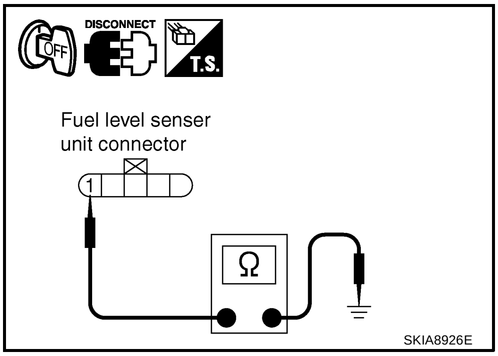


Check continuity between fuel level sensor unit harness connector B31 terminal 1 (B) and ground.

**1 (B) – Ground : Continuity should exist.**

OK or NG

OK >> GO TO 5.
NG >> Repair harness or connector.

## 5. CHECK FUEL LEVEL SENSOR

Check fuel level sensor units. Refer to DI-23, "FUEL LEVEL SENSOR UNIT CHECK" .

OK or NG

OK >> GO TO 6.
NG >> Replace fuel level sensor unit or sub fuel level sensor unit.

## 6. CHECK INSTALLATION CONDITION

Check fuel level sensor unit installation, and check whether the float arm interferes or binds with any of the internal components in fuel tank.

OK or NG

OK >> Replace combination meter.
NG >> Install fuel level sensor unit properly.

# The Fuel Gauge Pointer Fluctuates, Indicator Wrong Value or Varies

*AKS00BAH*

## 1. CHECK FUEL GAUGE FLUCTUATION

Test drive vehicle to see if gauge fluctuates only during driving and just before or soon after stopping.

Does the indication value vary only during driving and just before or soon after stopping?

YES >> The pointer fluctuation may be caused by fuel level change in fuel tank. Condition is normal.
NO >> Ask the customer about the situation when the symptom occurs in detail, and perform the trouble diagnosis.

## The Fuel Gauge Does Not Move to FULL Position

AKS00BAI

### 1. QUESTION 1

Does it take a long time for the pointer to move to FULL position?

YES or NO

YES >> GO TO 2.
NO >> GO TO 3.

### 2. QUESTION 2

Was the vehicle fueled with ignition switch ON?

YES or NO

YES >> Be sure to fuel the vehicle with ignition switch OFF. Otherwise, it will take a long time to move to FULL position because of the characteristic of fuel gauge.
NO >> GO TO 3.

### 3. QUESTION 3

Is the vehicle parked on an incline?

YES or NO

YES >> Check the fuel level indication with vehicle on a level surface.
NO >> GO TO 4.

### 4. QUESTION 4

During driving, does fuel gauge pointer move gradually toward EMPTY position?

YES or NO

YES >> Check fuel level sensor unit. Refer to DI-23, "FUEL LEVEL SENSOR UNIT CHECK" .
NO >> The float arm may interfere or bind with any of the components in fuel tank.

## Ambient Temperature Signal Inspection [Without Auto A/C]

AKS00BAJ

### 1. CHECK VOLTAGE BETWEEN AMBIENT SENSOR HARNESS CONNECTOR AND GROUND

1. Turn ignition switch OFF.
2. Disconnect ambient sensor connector.
3. Turn ignition switch ON.
4. Check voltage between ambient sensor harness connector E38 terminal 1 (R/B) and ground.

**1 (R/B) – Ground : Approx. 5 V**

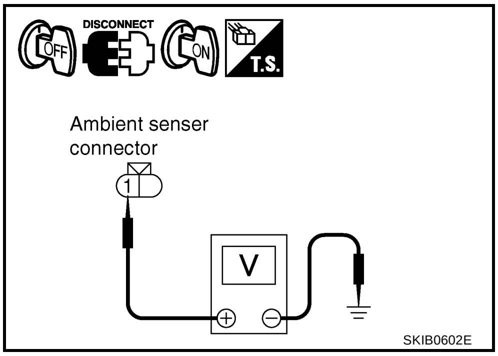


OK or NG

OK >> GO TO 2.
NG >> GO TO 4.

### 2. CHECK AMBIENT SENSOR CIRCUIT BETWEEN AMBIENT SENSOR AND COMBINATION METER

1. Turn ignition switch OFF.
2. Disconnect combination meter connector.
3. Check continuity between combination meter harness connector M44 terminal 28 (B/Y) and ambient sensor harness connector E38 terminal 2 (B/Y).

**28 (B/Y) – 2 (B/Y) : Continuity should exist.**

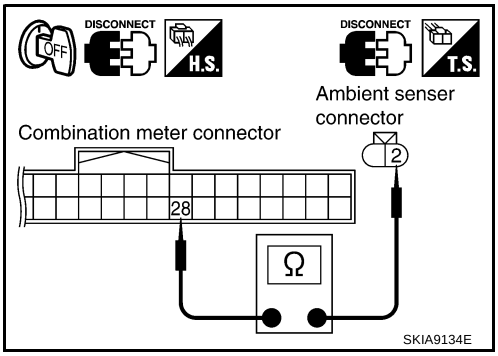


OK or NG

OK >> GO TO 3.
NG >> Repair harness or connector.

## 3. CHECK AMBIENT SENSOR

Check ambient sensor. Refer to DI-23, "AMBIENT SENSOR CHECK" .

OK or NG

OK >> Replace combination meter.
NG >> Replace ambient sensor.

## 4. CHECK AMBIENT SENSOR CIRCUIT BETWEEN AMBIENT SENSOR AND COMBINATION METER

1. Turn ignition switch OFF.
2. Disconnect combination meter connector.
3. Check continuity between combination meter harness connector M44 terminal 27 (R/B) and ambient sensor connector E38 terminal 1 (R/B).

**27 (R/B) – 1 (R/B) : Continuity should exist.**

4. Check continuity between combination meter harness connector M44 terminal 27 (R/B) and ground.

**27 (R/B) – Ground : Continuity should not exist.**

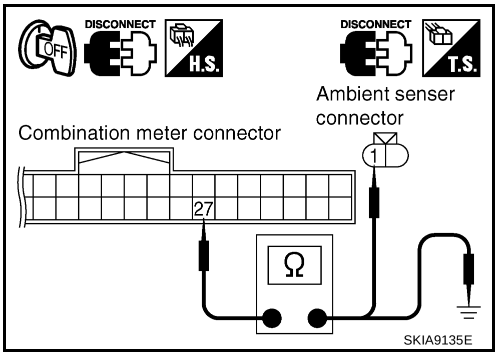


OK or NG

OK >> Replace combination meter.
NG >> Repair harness or connector.

## Ambient Temperature Signal Inspection [With Auto A/C]

AKS00BAK

### 1. CHECK AUTO A/C RECOGNITION SIGNAL INPUT

1. Turn ignition switch OFF.
2. Disconnect combination meter connector.
3. Turn ignition switch ON.
4. Check voltage between combination meter harness connector M44 terminal 29 (Y) and ground.

**29 (Y) – Ground : Approx. 5 V**

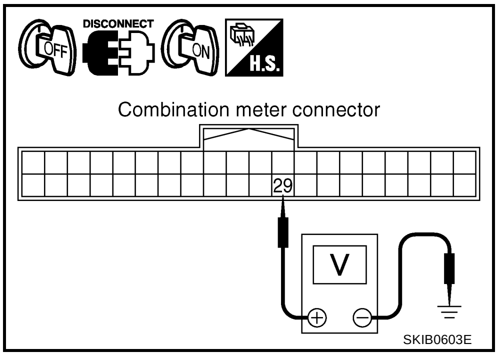


OK or NG

OK >> GO TO 3.
NG >> GO TO 2.

### 2. CHECK AUTO A/C RECOGNITION SIGNAL CIRCUIT

1. Turn ignition switch OFF.
2. Disconnect A/C auto amp. connector.
3. Check continuity between combination meter harness connector M44 terminal 29 (Y) and A/C auto amp. harness connector M53 terminal 28(Y).

**29 (Y) – 28 (Y) : Continuity should exist.**

4. Check continuity between connector M44 terminal 29 (Y) and ground.

**29 (Y) – Ground : Continuity should not exist.**

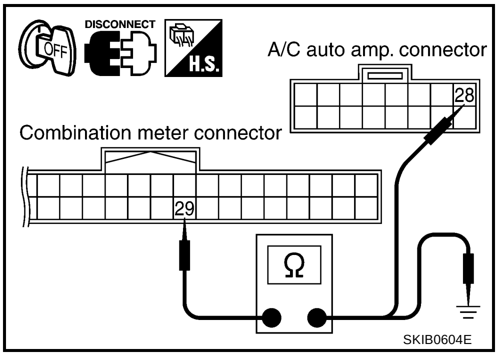


OK or NG

OK >> Replace A/C auto amp.
NG >> Repair harness or connector.

### 3. CHECK AMBIENT SENSOR CIRCUIT BETWEEN AMBIENT SENSOR AND COMBINATION METER

1. Turn ignition switch OFF.
2. Disconnect ambient sensor connector.
3. Check continuity between combination meter harness connector M44 terminal 27 (R/B) and ambient sensor harness connector E38 terminal 1 (R/B).

**27 (R/B) – 1 (R/B) : Continuity should exist.**

4. Check continuity between combination meter harness connector M44 terminal 27 (R/B) and ground.

**27 (R/B) – Ground : Continuity should not exist.**

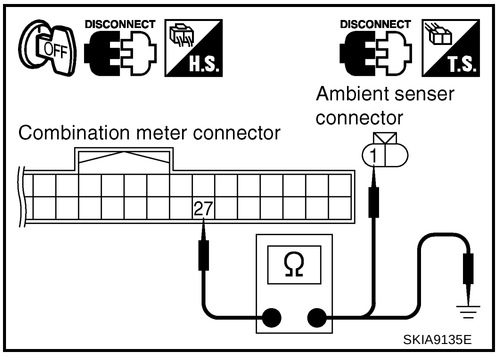


OK or NG

OK >> GO TO 4.
NG >> Repair harness or connector.

### 4. CHECK A/C AUTO AMP. CIRCUIT

Check A/C auto amp. circuit. Refer to ATC-89, "Ambient Sensor Circuit" in ATC section.

OK or NG

OK >> Replace combination meter.
NG >> Check applicable parts, repair or replace corresponding parts.

# Electrical Components Inspection

AKS00BAL

## FUEL LEVEL SENSOR UNIT CHECK

For removal, refer to FL-4, "FUEL LEVEL SENSOR UNIT, FUEL FILTER AND FUEL PUMP ASSEMBLY" .

### Fuel Level Sensor Unit

Check the resistance between terminals 1 and 4.

| Terminals | | Float position mm (in) | | | Resistance value Ω |
|---|---|---|---|---|---|
| 4 | 1 | *1 | Full | 30 (1.18) | Approx. 5 |
| | | *2 | Empty | 159 (6.25) | Approx. 80 |

*1 and *2: When float rod is in contact with stopper.

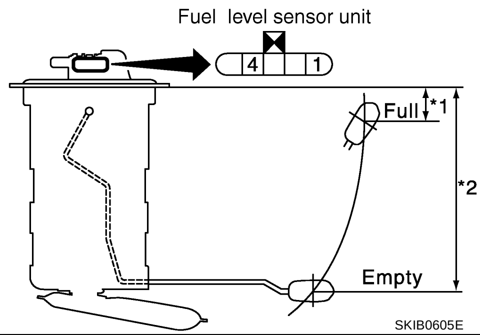

SKIB0605E

### Sub Fuel Level Sensor Unit

Check the resistance between terminals 1 and 3.

| Terminals | | Float position mm (in) | | | Resistance value Ω |
|---|---|---|---|---|---|
| 1 | 3 | *1 | Full | 30 (1.18) | Approx. 1 |
| | | *2 | Empty | 191 (7.52) | Approx. 40.5 |

*1 and *2: When float rod is in contact with stopper.

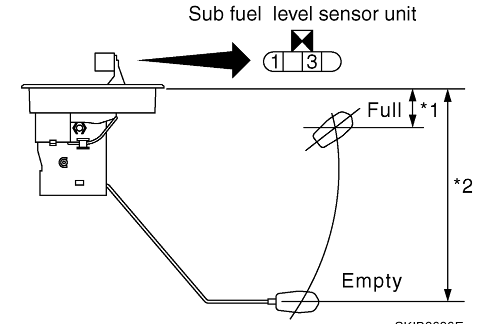

SKIB0606E

## AMBIENT SENSOR CHECK

After disconnecting ambient sensor connector, measure resistance between terminals 2 and 1 at sensor side, using the table below.

| Temperature °C (°F) | Resistance kΩ |
|---|---|
| -15 (5) | 12.73 |
| -10 (14) | 9.92 |
| -5 (23) | 7.80 |
| 0 (32) | 6.19 |
| 5 (41) | 4.95 |
| 10 (50) | 3.99 |
| 15 (59) | 3.24 |
| 20 (68) | 2.65 |
| 25 (77) | 2.19 |
| 30 (86) | 1.81 |
| 35 (95) | 1.51 |
| 40 (104) | 1.27 |
| 45 (113) | 1.07 |

If NG, replace ambient sensor.

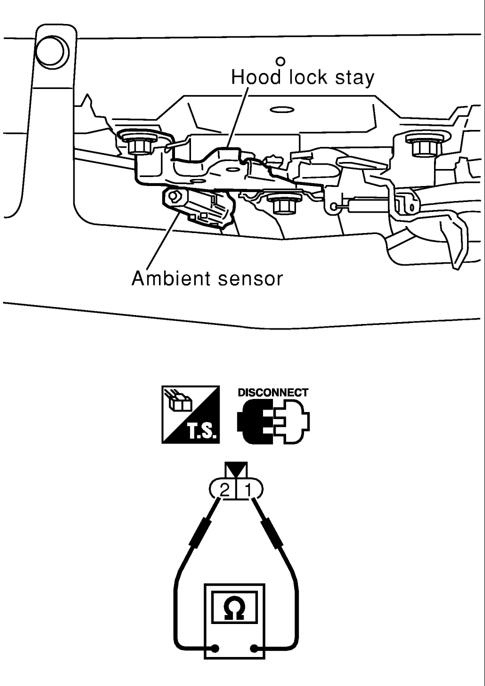

RJIA0684E

## Removal and Installation for Combination Meter

AKS00BAM

### REMOVAL

1. Remove cluster lid A. Refer to IP-10, "INSTRUMENT PANEL ASSEMBLY" .
2. Remove the screws (4), and pull out combination meter.
3. Disconnect connectors and remove combination meter.

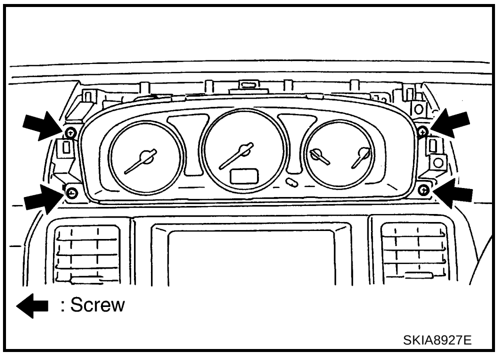


### INSTALLATION

Installation is the reverse order of removal.

## Disassembly and Assembly for Combination Meter

AKS00BAN

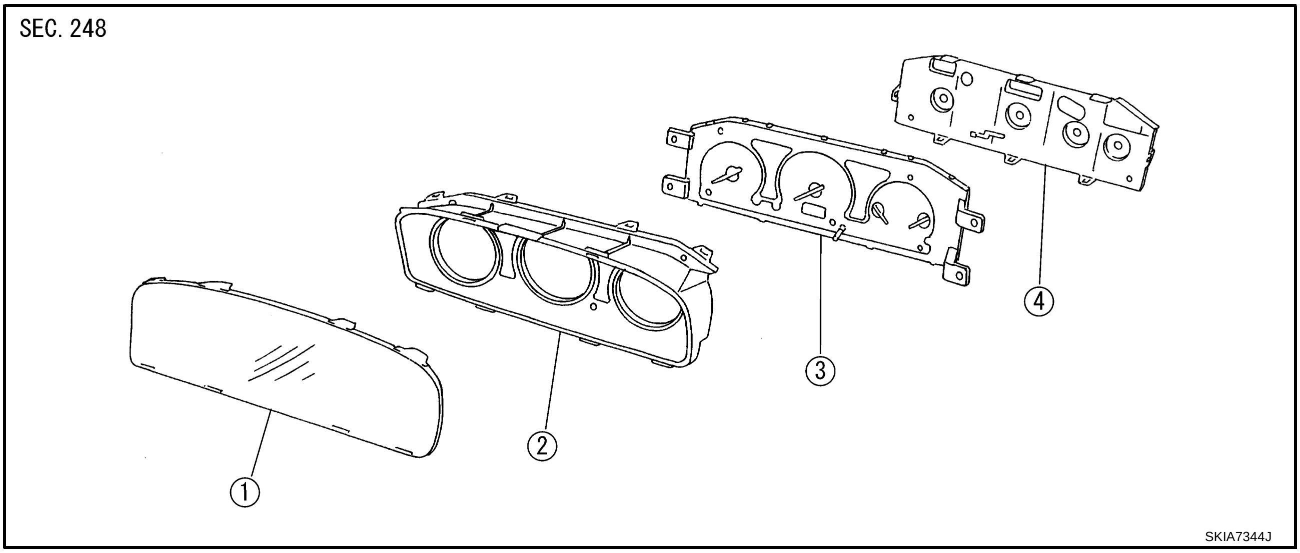


1. Front cover
2. Upper housing
3. Unified meter control unit assembly
4. Meter cover

### DISASSEMBLY

1. Disengaged the tabs (8) to separate front cover.
2. Disengaged the tabs (8) to separate upper housing.
3. Disengaged the tabs (8) to separate meter cover.

### ASSEMBLY

Assembly is the reverse order of disassembly.

# WARNING LAMPS

PFP:24814

## Schematic

AKS00BAO

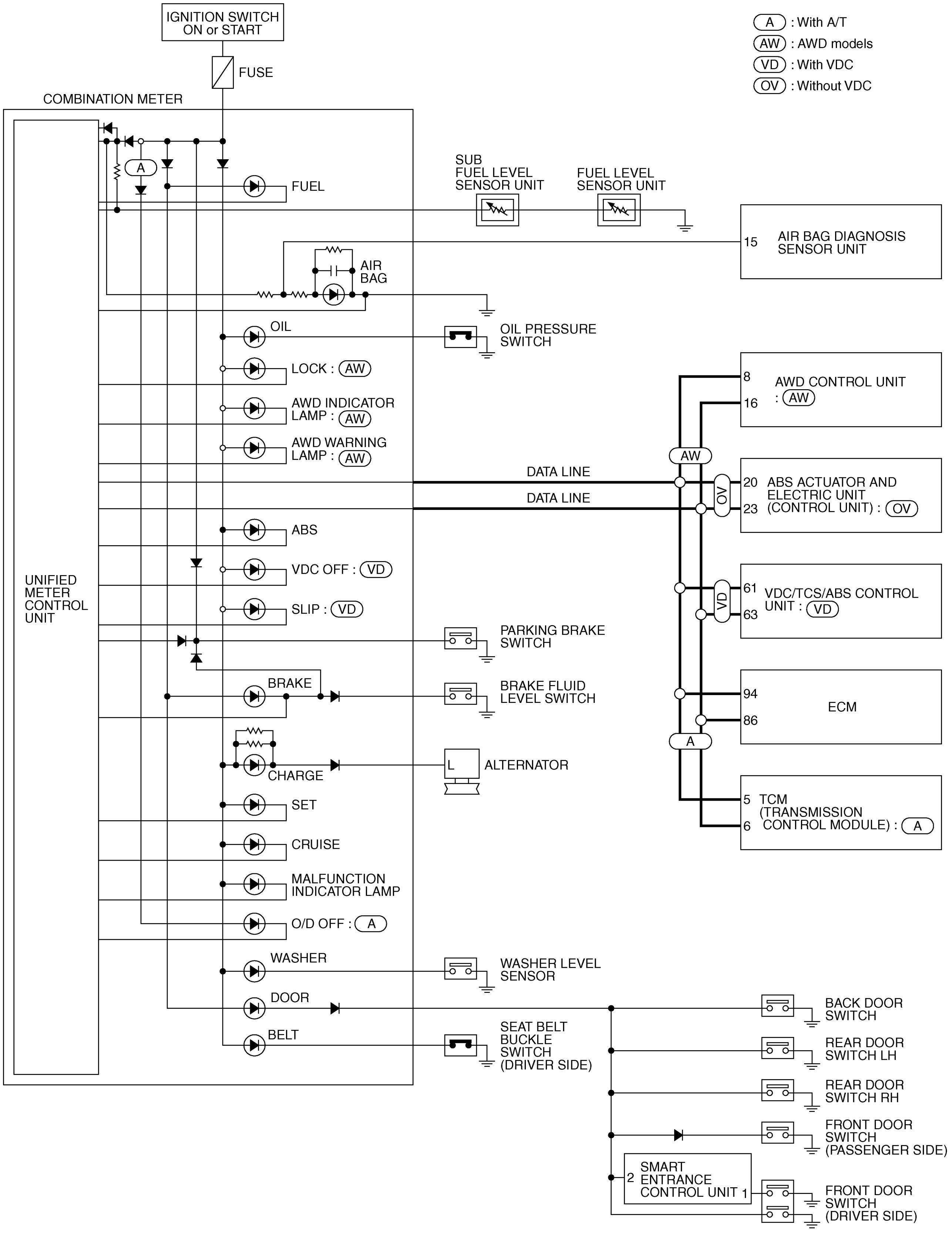


TKWB0175E

## Wiring Diagram — WARN —

AKS00BAP

### AWD MODELS

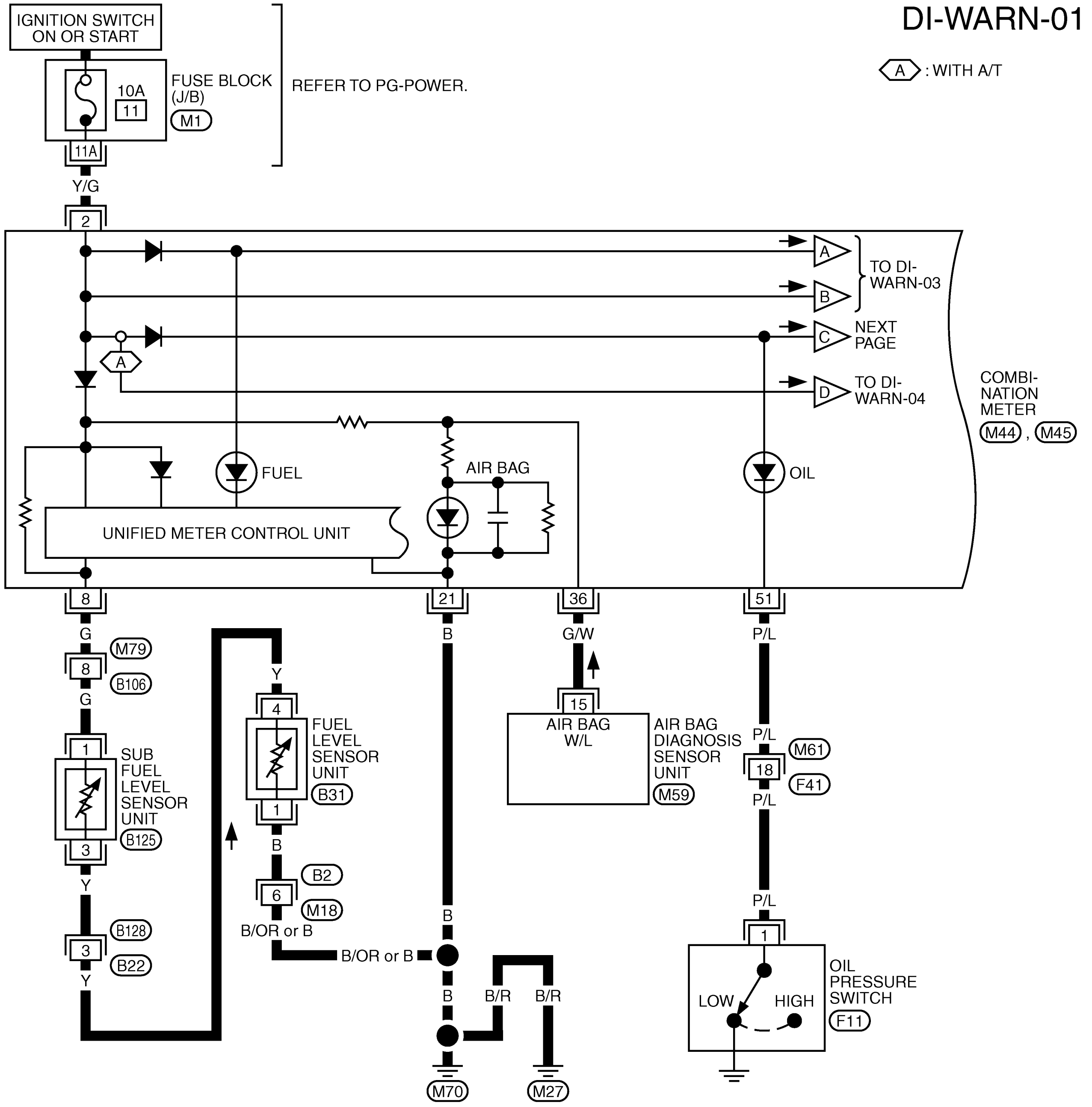


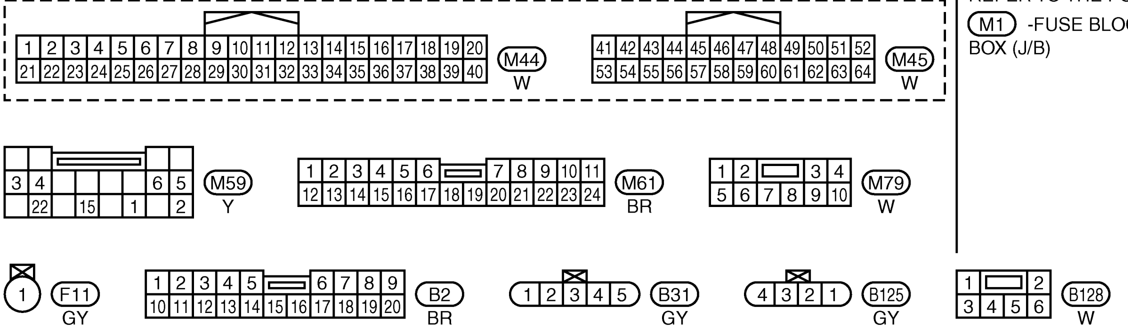


REFER TO THE FOLLOWING.
M1 -FUSE BLOCK-JUNCTION BOX (J/B)

TKWB0176E

DI-WARN-02

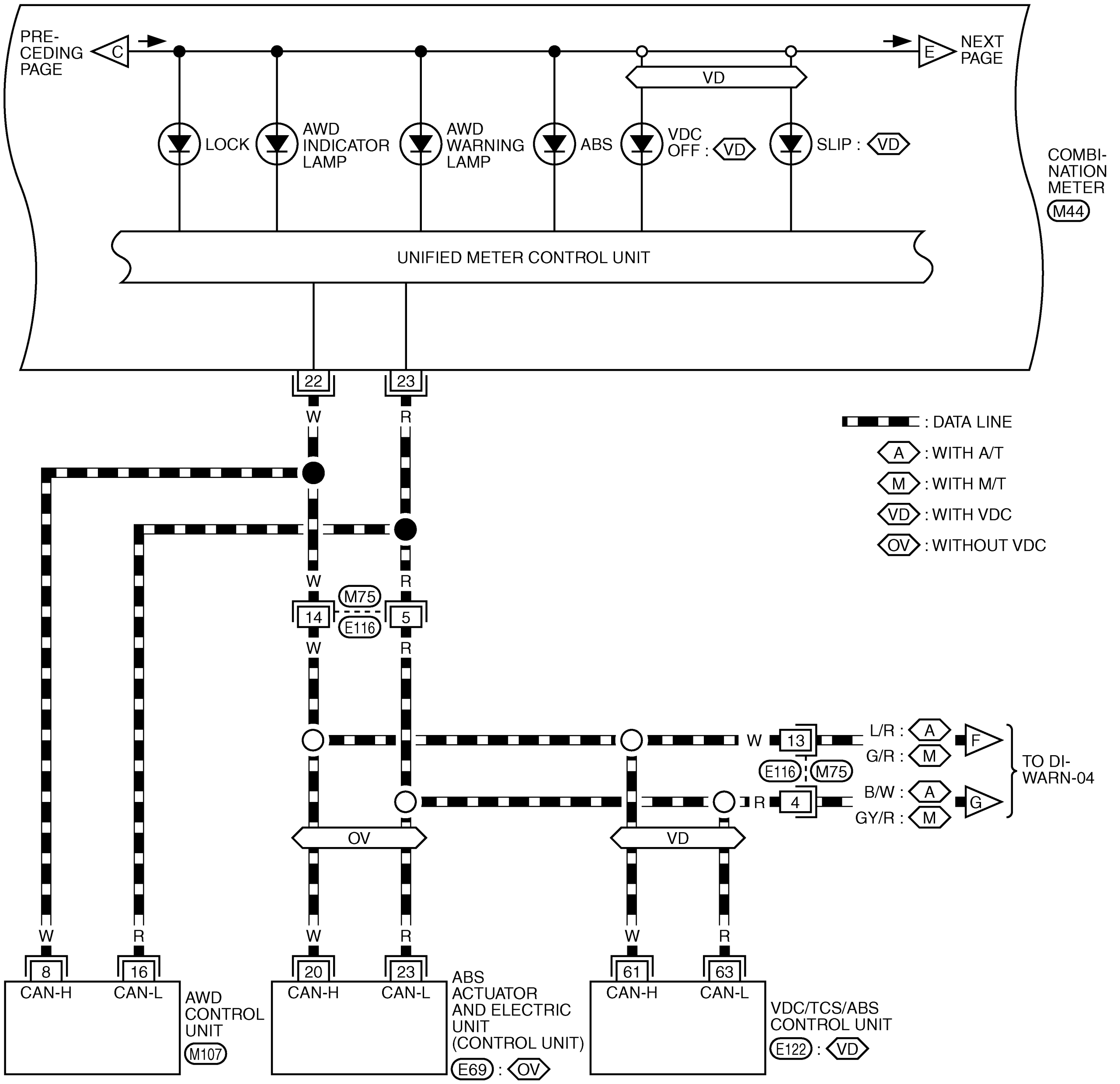


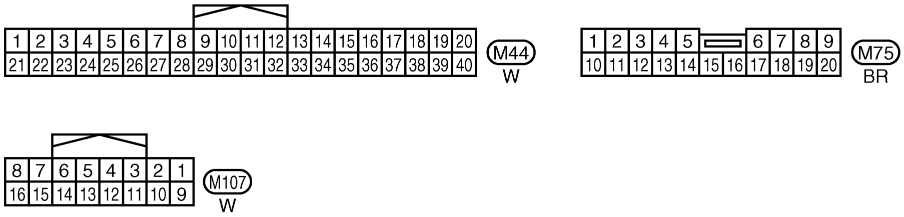


REFER TO THE FOLLOWING.
E69 , E122 -ELECTRICAL UNITS

TKWB0177E

DI-WARN-03

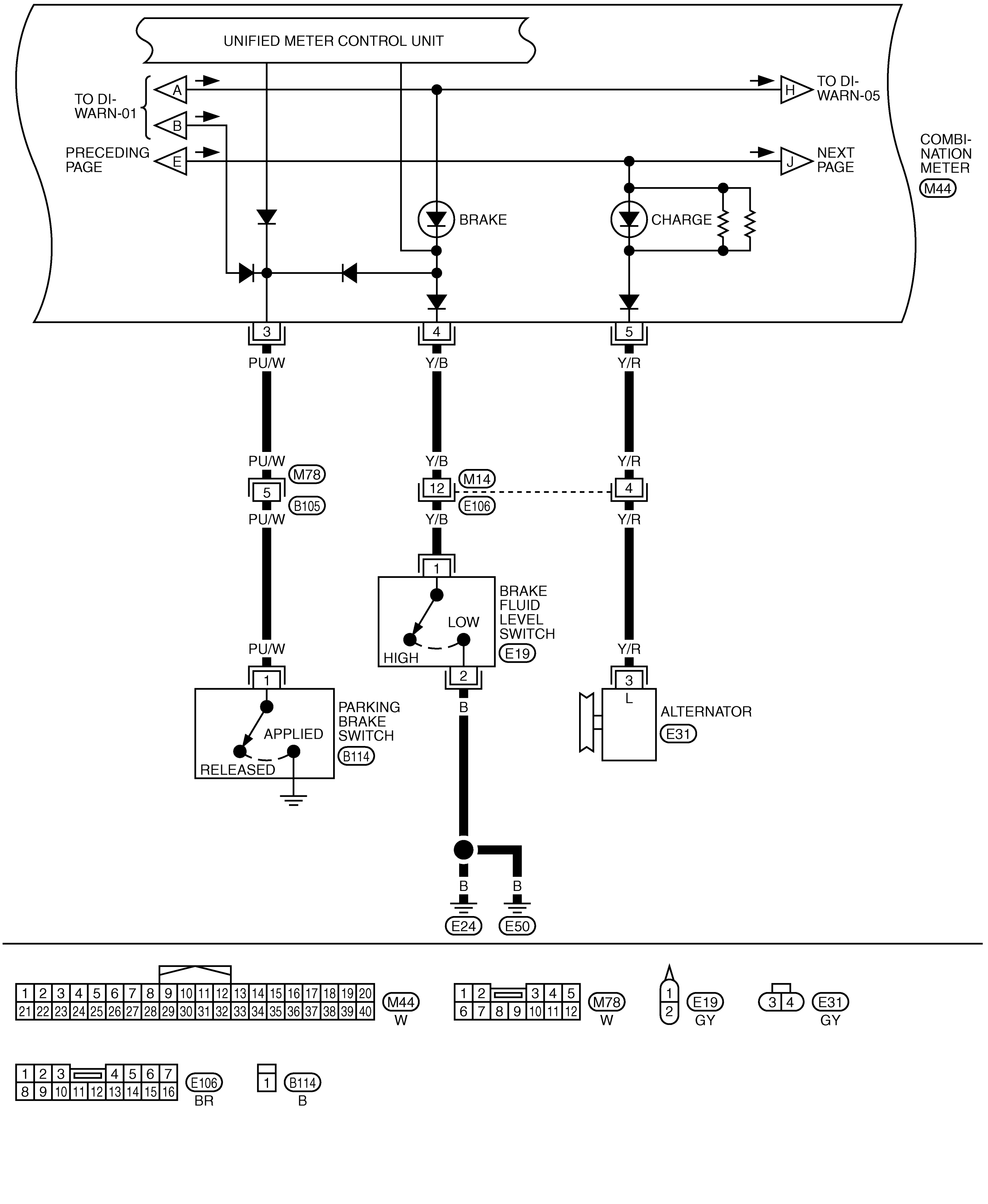


TKWB0178E

DI-WARN-04

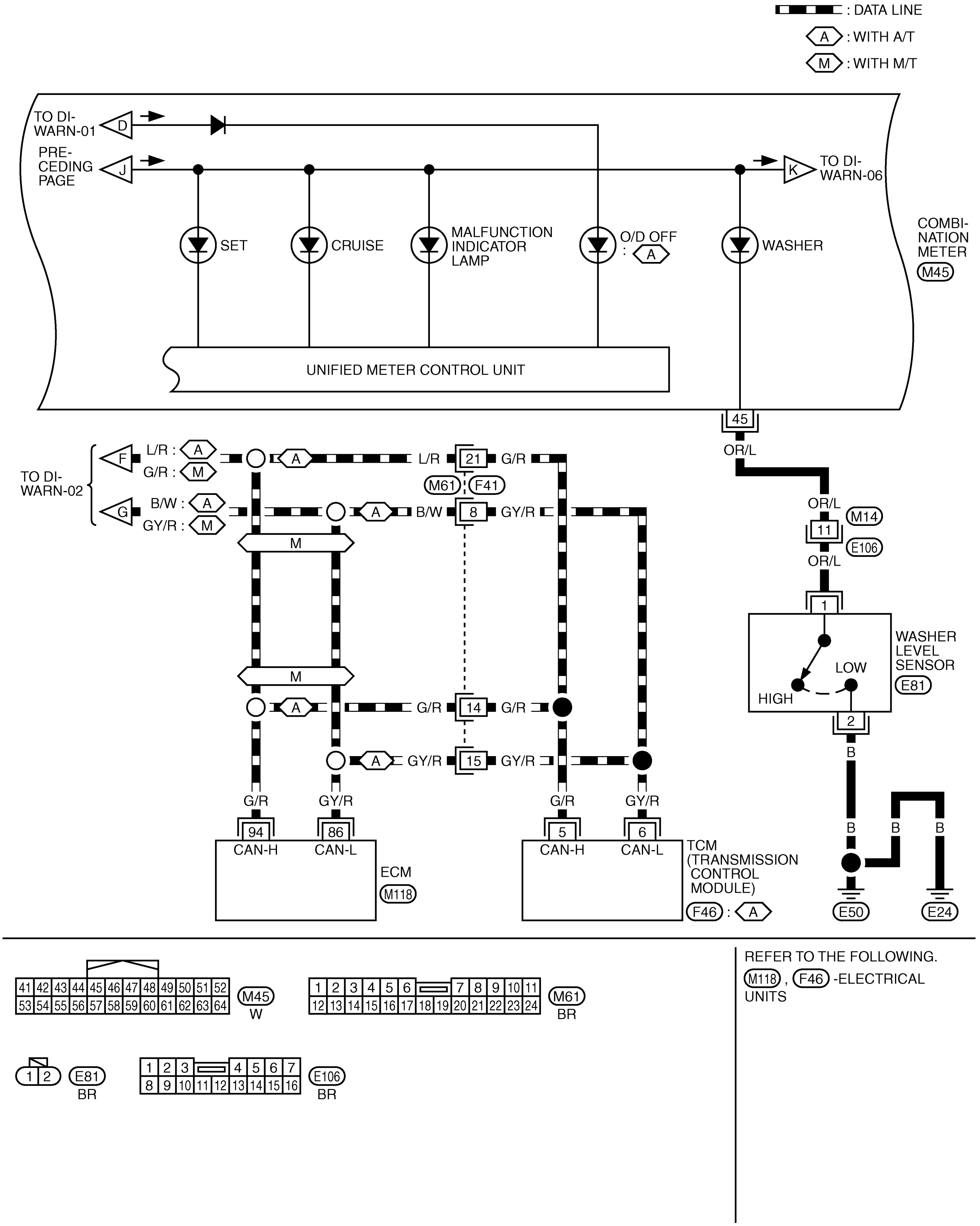
: DATA LINE
A : WITH A/T
M : WITH M/T
TO DI-WARN-01
D
PRE-CEDING PAGE
J
TO DI-WARN-06
K
SET
CRUISE
MALFUNCTION INDICATOR LAMP
O/D OFF : A
WASHER
COMBI-NATION METER
M45
UNIFIED METER CONTROL UNIT
45
OR/L
TO DI-WARN-02
F
L/R : A
G/R : M
G
B/W : A
GY/R : M
L/R
21
G/R
M61
F41
B/W
8
GY/R
M
G/R
14
GY/R
15
OR/L
M14
11
E106
1
WASHER LEVEL SENSOR
E81
LOW
HIGH
2
B
G/R
GY/R
94
CAN-H
86
CAN-L
ECM
M118
5
6
TCM (TRANSMISSION CONTROL MODULE)
F46 : A
E50
E24
41 42 43 44 45 46 47 48 49 50 51 52
53 54 55 56 57 58 59 60 61 62 63 64
M45
W
1 2 3 4 5 6 7 8 9 10 11
12 13 14 15 16 17 18 19 20 21 22 23 24
M61
BR
1 2
E81
BR
1 2 3 4 5 6 7
8 9 10 11 12 13 14 15 16
E106
BR
REFER TO THE FOLLOWING.
M118, F46 -ELECTRICAL UNITS
TKWB0179E

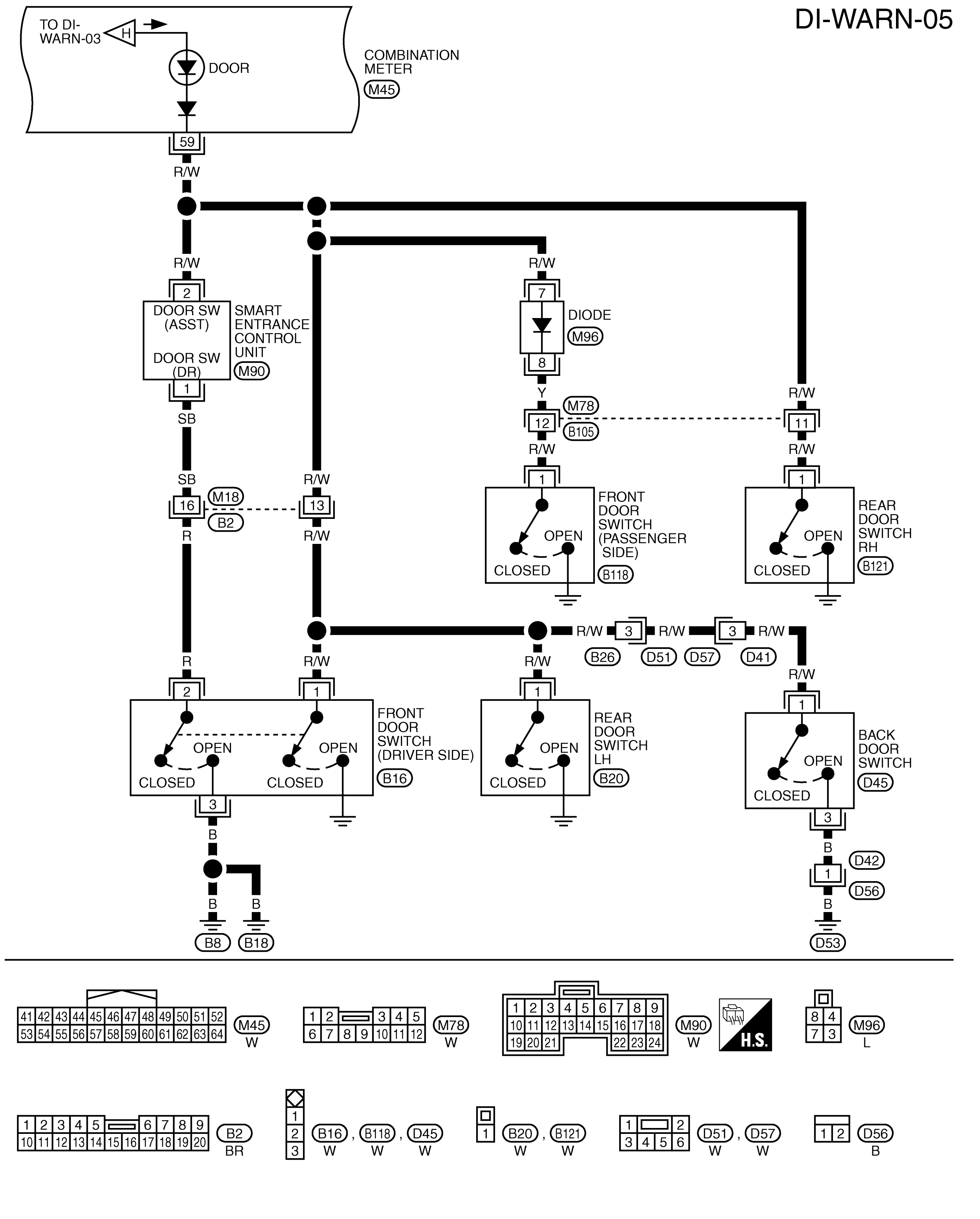
DI-WARN-05
TO DI-WARN-03
H
DOOR
COMBINATION METER
M45
59
R/W
DOOR SW (ASST)
DOOR SW (DR)
SMART ENTRANCE CONTROL UNIT
M90
SB
R
DIODE
M96
Y
M78
B105
M18
B2
FRONT DOOR SWITCH (PASSENGER SIDE)
B118
REAR DOOR SWITCH RH
B121
OPEN
CLOSED
B26
D51
D57
D41
FRONT DOOR SWITCH (DRIVER SIDE)
B16
REAR DOOR SWITCH LH
B20
BACK DOOR SWITCH
D45
B
D42
D56
B8
B18
D53
H.S.
W
L
BR
TKWB0180E

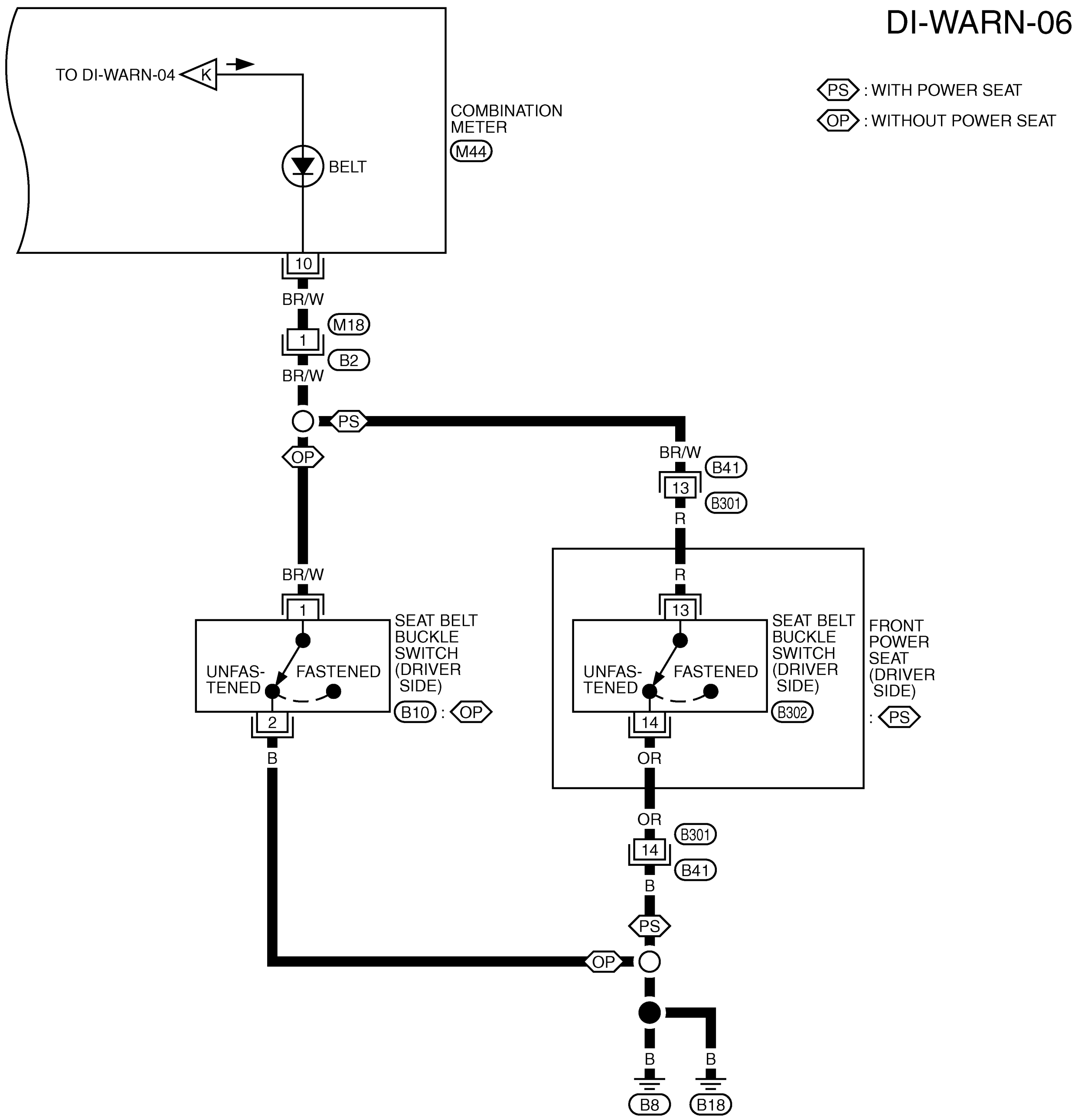


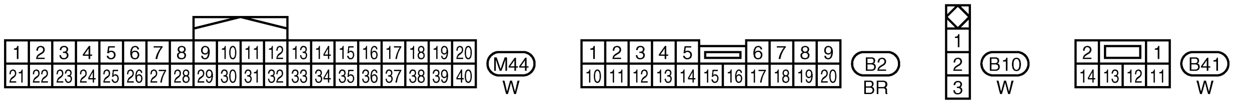


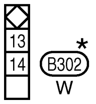


*: THIS CONNECTOR IS NOT SHOWN IN "HARNESS LAYOUT", PG SECTION.

TKWB0181E

## 2WD MODELS

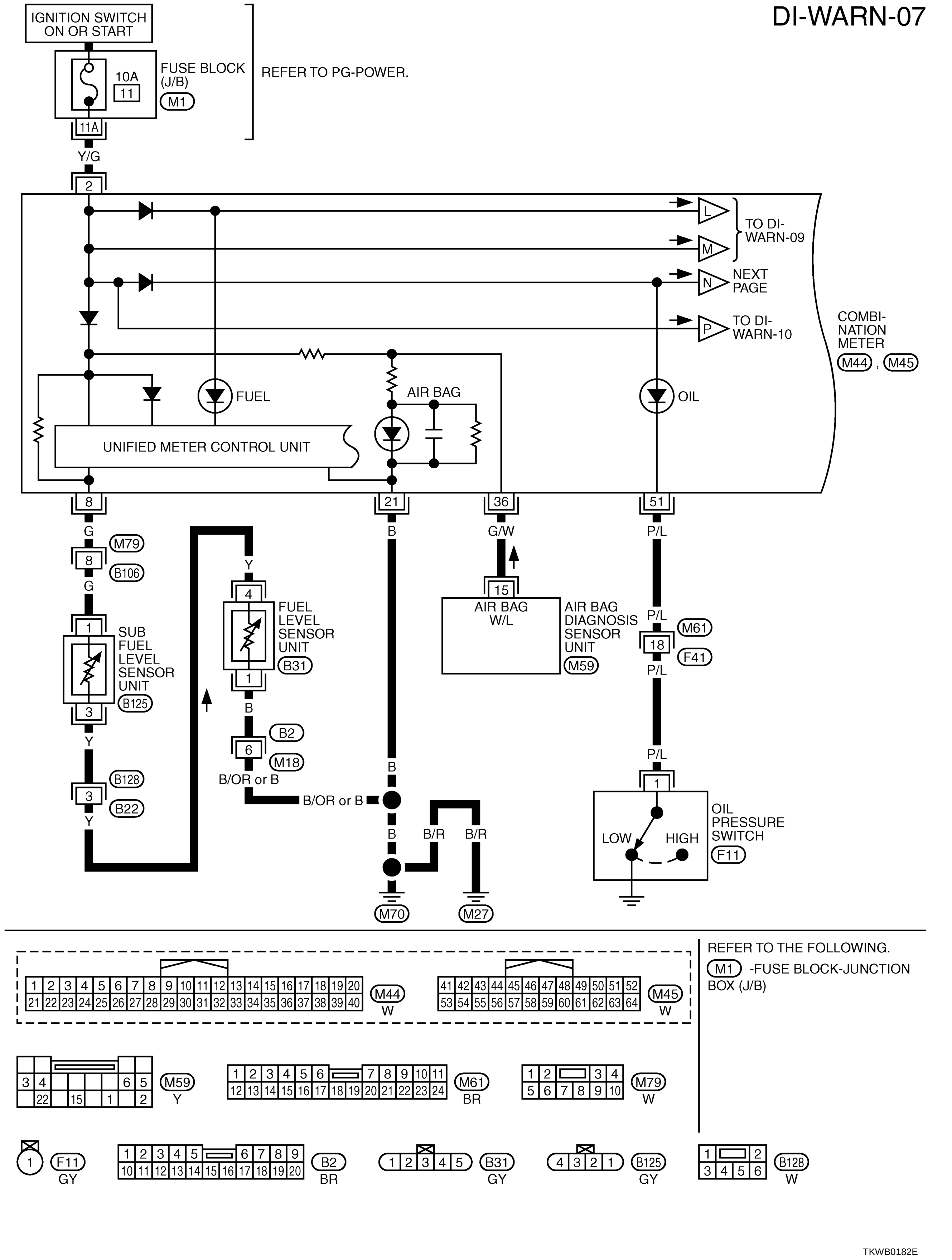
DI-WARN-07
IGNITION SWITCH ON OR START
10A
11
FUSE BLOCK (J/B)
M1
REFER TO PG-POWER.
11A
Y/G
2
L
M
TO DI-WARN-09
N
NEXT PAGE
P
TO DI-WARN-10
COMBI-NATION METER
M44 , M45
FUEL
AIR BAG
OIL
UNIFIED METER CONTROL UNIT
8
21
36
51
G
B
G/W
P/L
M79
B106
Y
4
FUEL LEVEL SENSOR UNIT
B31
1
15
AIR BAG W/L
AIR BAG DIAGNOSIS SENSOR UNIT
M59
M61
18
F41
SUB FUEL LEVEL SENSOR UNIT
B125
3
B2
6
M18
B/OR or B
B128
B22
B/R
OIL PRESSURE SWITCH
LOW
HIGH
F11
M70
M27
REFER TO THE FOLLOWING.
M1 -FUSE BLOCK-JUNCTION BOX (J/B)
M44 W
M45 W
M59 Y
M61 BR
M79 W
F11 GY
B2 BR
B31 GY
B125 GY
B128 W
TKWB0182E

DI-WARN-08

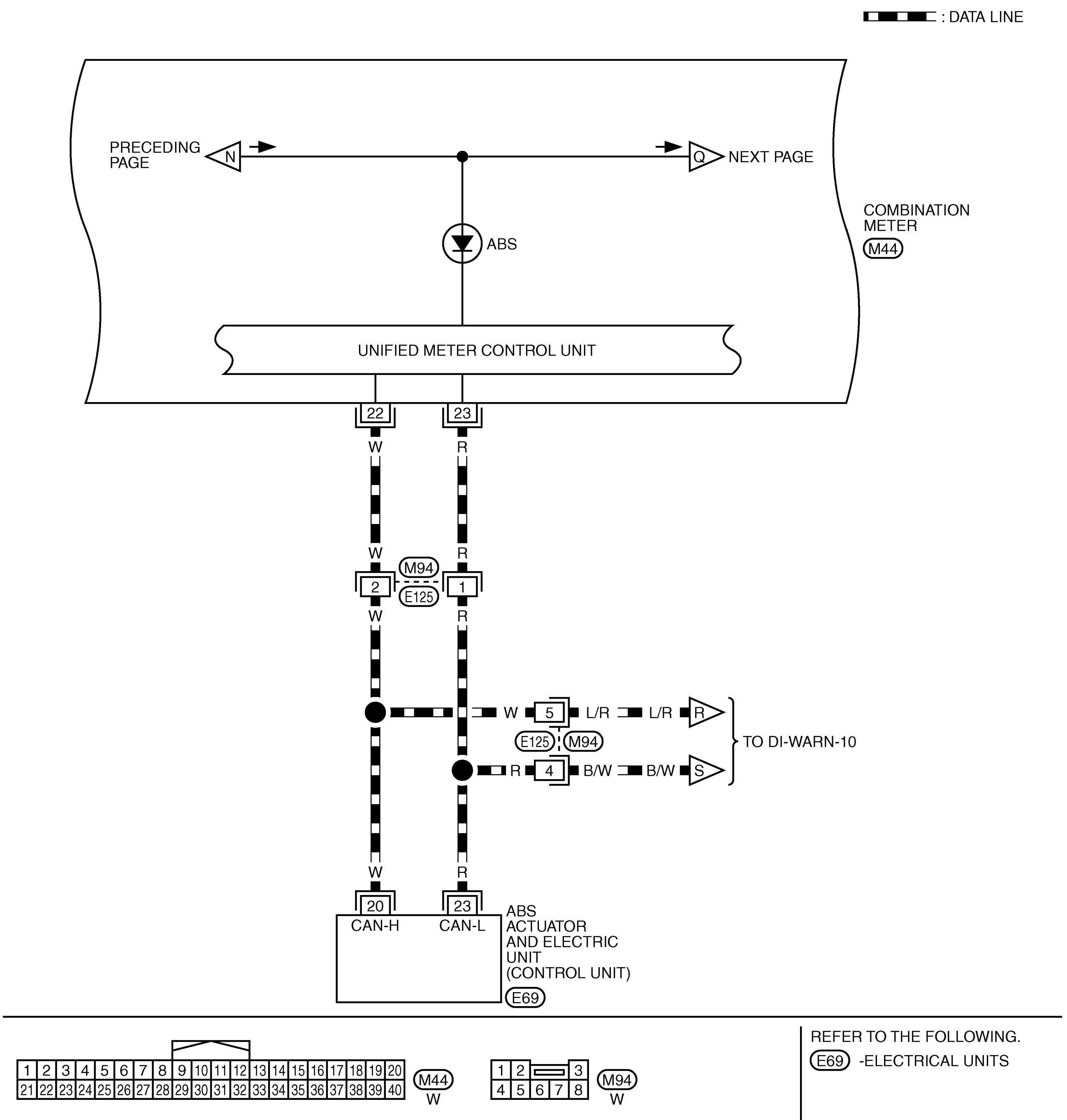


REFER TO THE FOLLOWING.
E69 -ELECTRICAL UNITS

TKWB0183E

DI-WARN-09

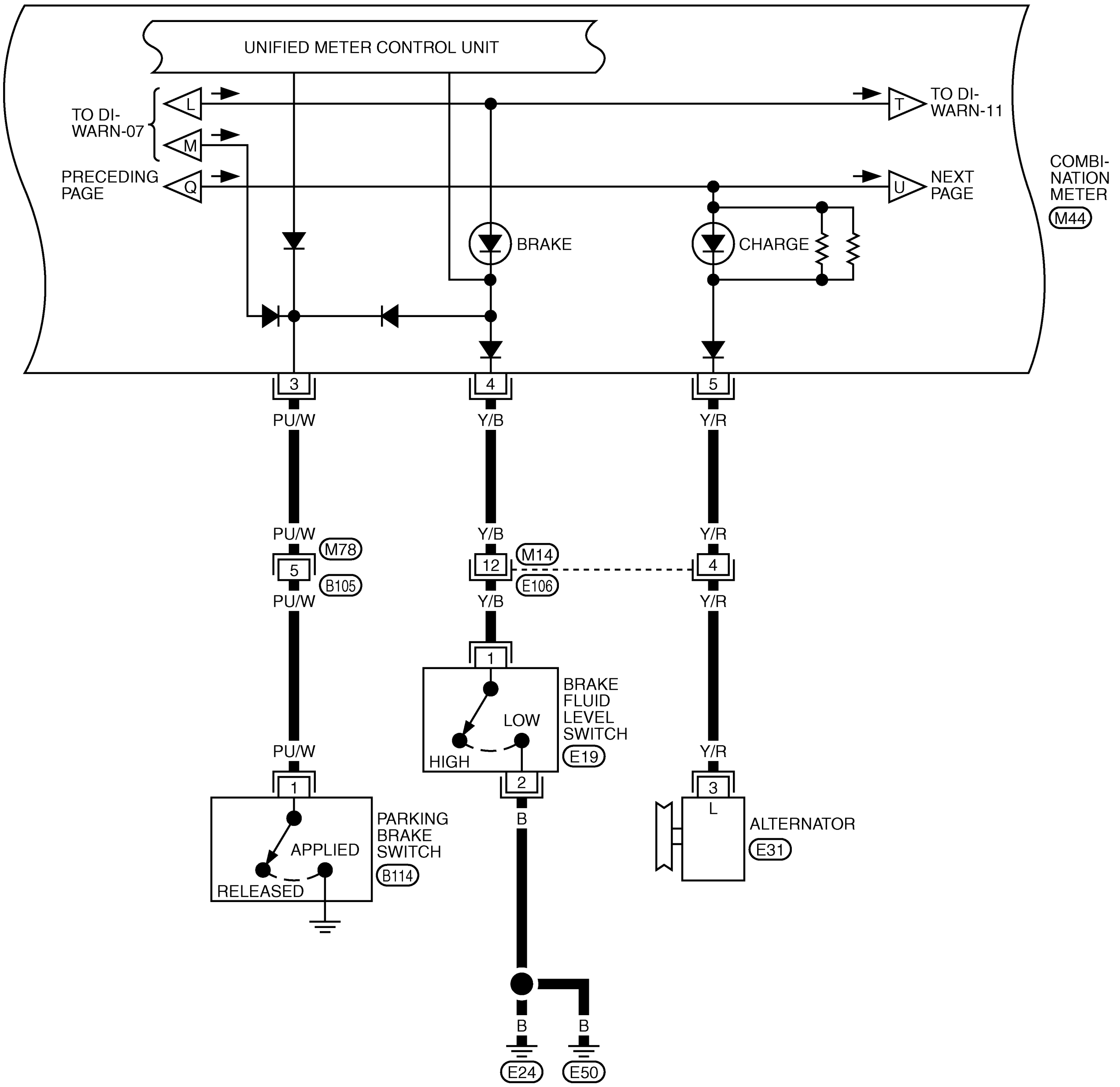


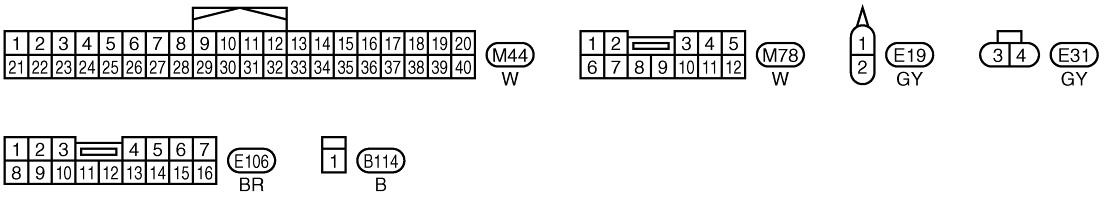


TKWB0184E

DI-WARN-10

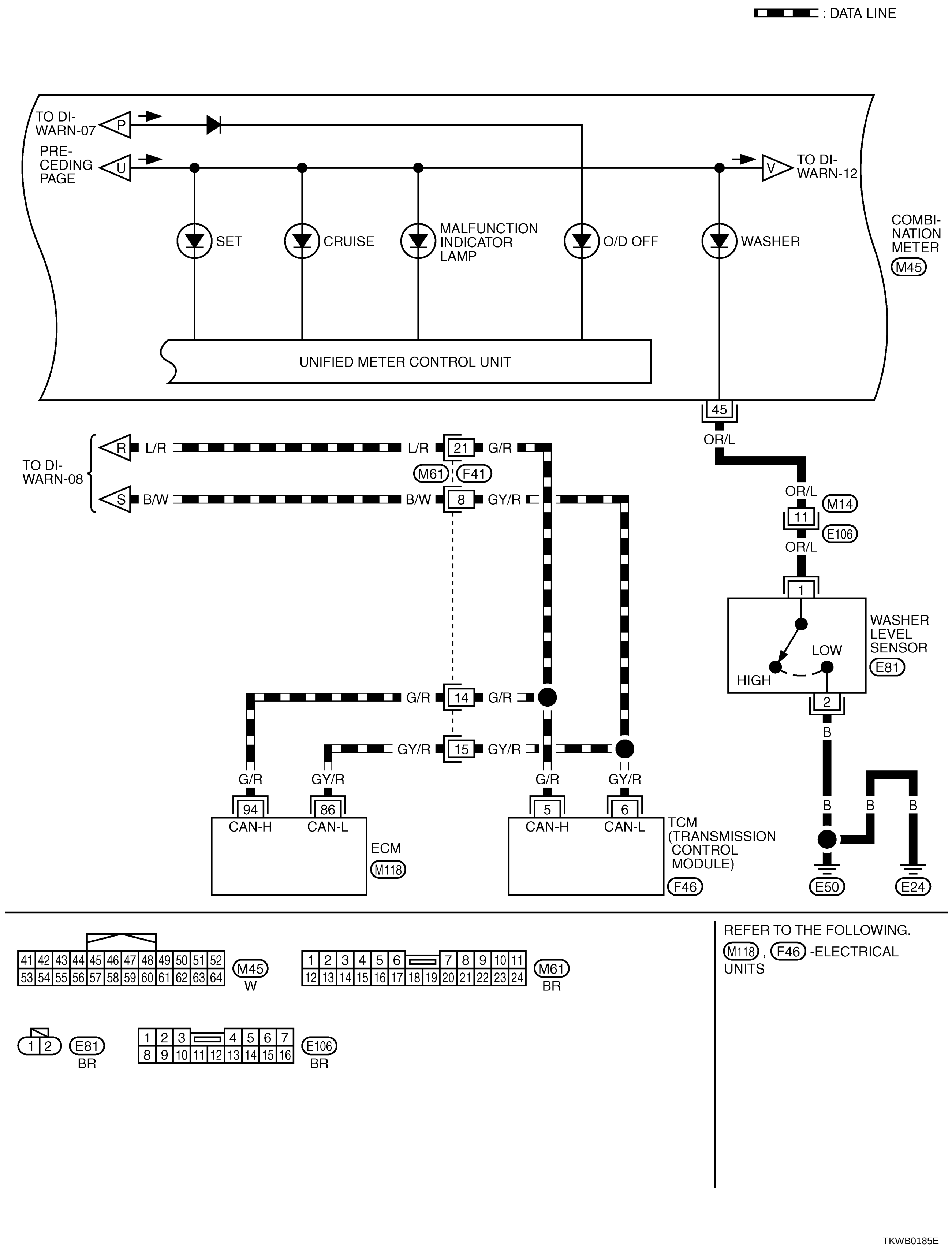
: DATA LINE
TO DI-WARN-07
P
PRE-CEDING PAGE
U
V
TO DI-WARN-12
SET
CRUISE
MALFUNCTION INDICATOR LAMP
O/D OFF
WASHER
COMBI-NATION METER
M45
UNIFIED METER CONTROL UNIT
45
OR/L
TO DI-WARN-08
R
L/R
S
B/W
21
G/R
M61
F41
8
GY/R
M14
11
E106
1
WASHER LEVEL SENSOR
E81
LOW
HIGH
2
B
14
15
94
86
CAN-H
CAN-L
ECM
M118
5
6
TCM (TRANSMISSION CONTROL MODULE)
F46
E50
E24
M45
W
M61
BR
E81
BR
E106
BR
REFER TO THE FOLLOWING.
M118, F46 -ELECTRICAL UNITS
TKWB0185E

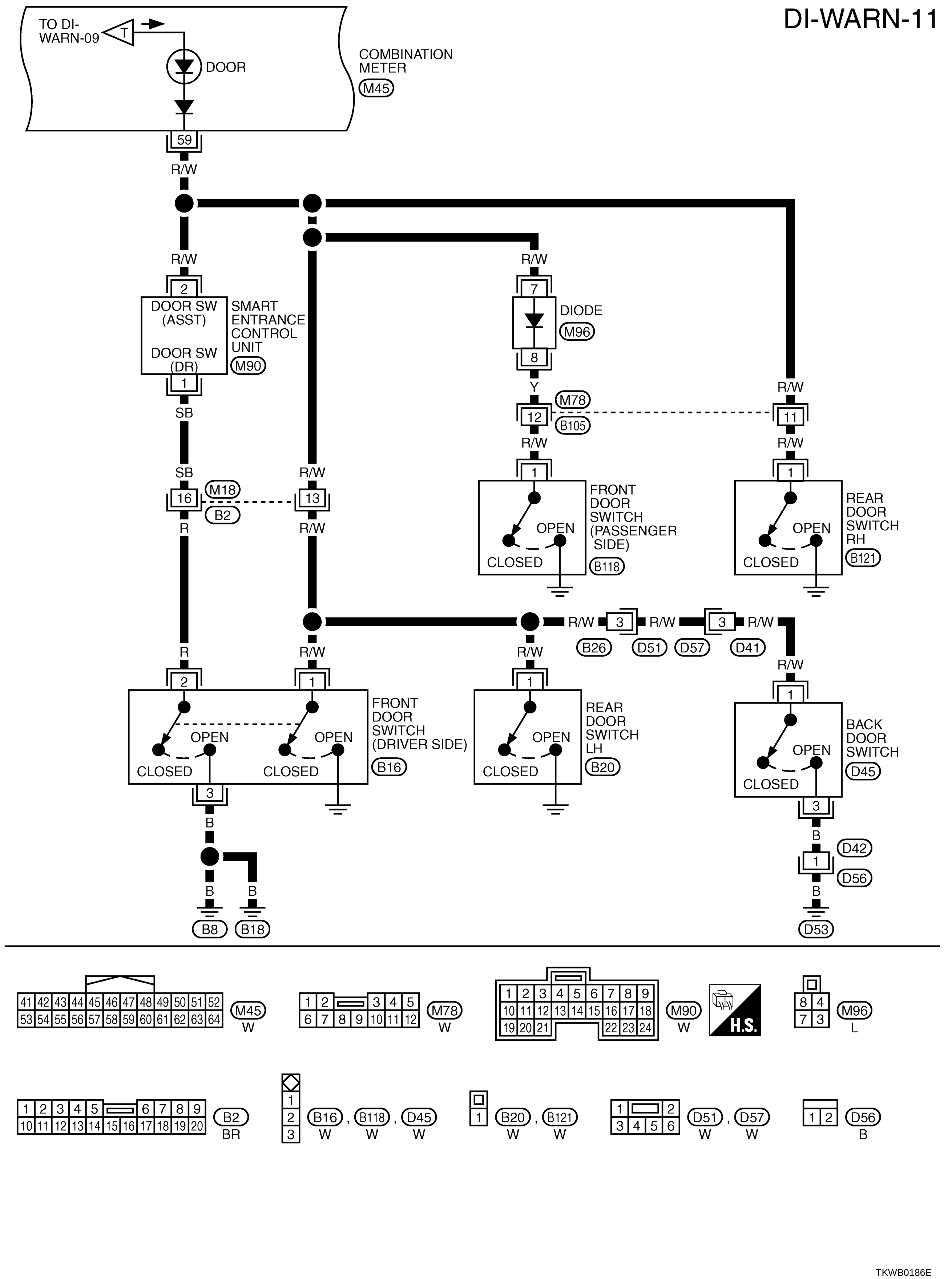
DI-WARN-11
TO DI-WARN-09
T
DOOR
COMBINATION METER
M45
59
R/W
R/W
DOOR SW (ASST)
DOOR SW (DR)
SMART ENTRANCE CONTROL UNIT
M90
2
1
SB
R/W
7
DIODE
M96
8
Y
M78
12
B105
11
16
M18
B2
13
R
FRONT DOOR SWITCH (PASSENGER SIDE)
B118
REAR DOOR SWITCH RH
B121
OPEN
CLOSED
B26
D51
D57
D41
3
FRONT DOOR SWITCH (DRIVER SIDE)
B16
REAR DOOR SWITCH LH
B20
BACK DOOR SWITCH
D45
B
D42
D56
B8
B18
D53
W
BR
L
H.S.
TKWB0186E

DI-WARN-12

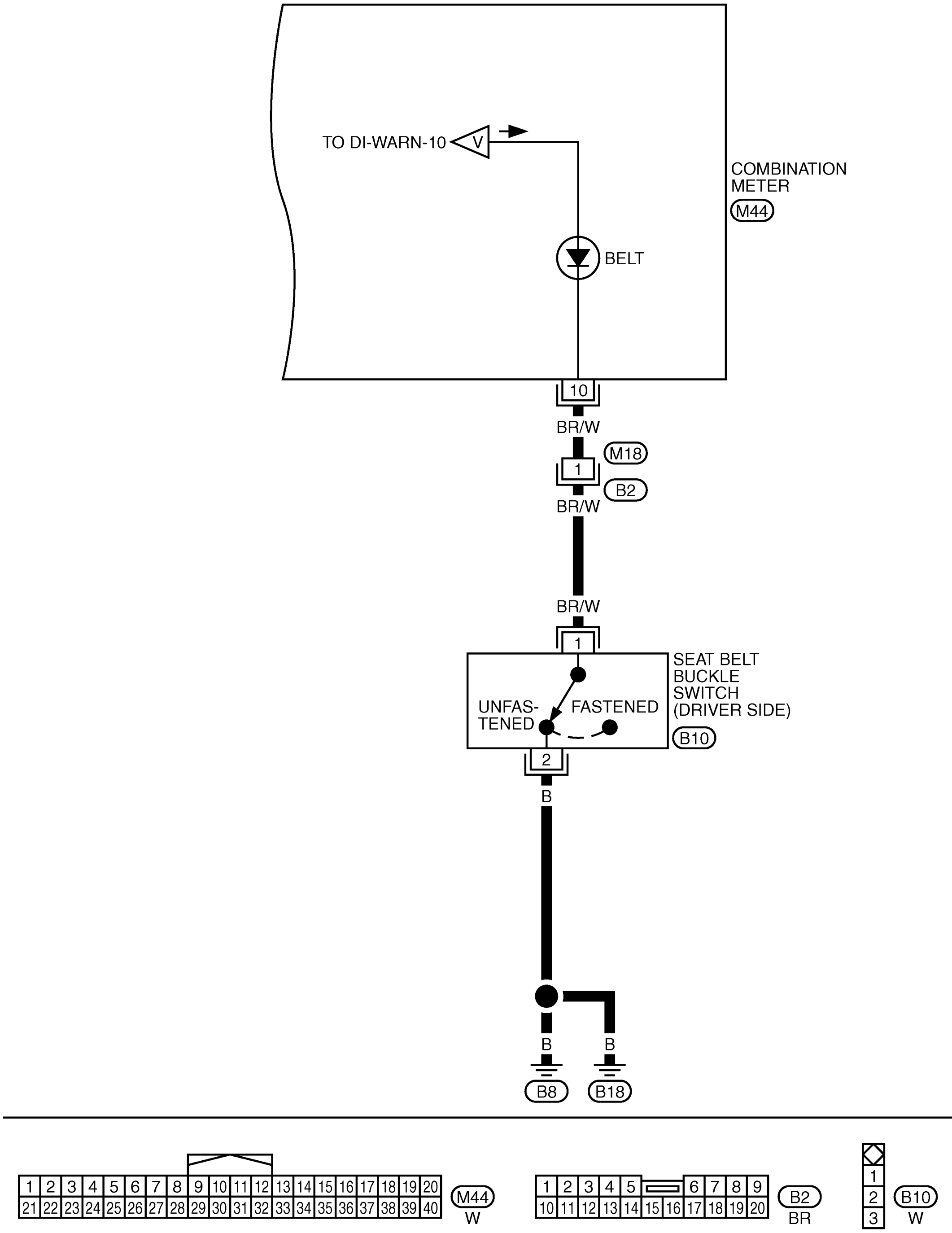


TKWB0187E

# Electrical Components Inspection

AKS00BAT

## OIL PRESSURE SWITCH CHECK

| Condition | Oil pressure kPa ($kg/cm^2$ , psi) | Continuity |
|---|---|---|
| Engine running | More than 29 (0.3, 4) | No |
| Engine stopped | Less than 29 (0.3, 4) | Yes |

Check the continuity between the terminals of oil pressure switch and body ground.

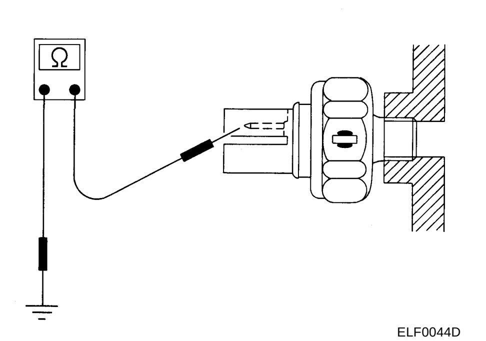


ELF0044D

## DIODE CHECK

- Check continuity using an ohmmeter.
- Diode is functioning properly if test results are as shown in the figure at left.
- Check diodes at the combination meter harness connector instead of on the combination meter assembly.

  **NOTE:**
  Specification may vary depending on the type of tester. Before performing this inspection, be sure to refer to the instruction manual for the tester to be used.

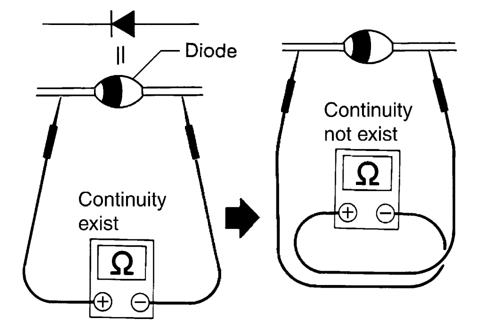


SKIB0607E

# A/T INDICATOR

PFP:24814

## Wiring Diagram — AT/IND — AWD MODELS

AKS00BAV

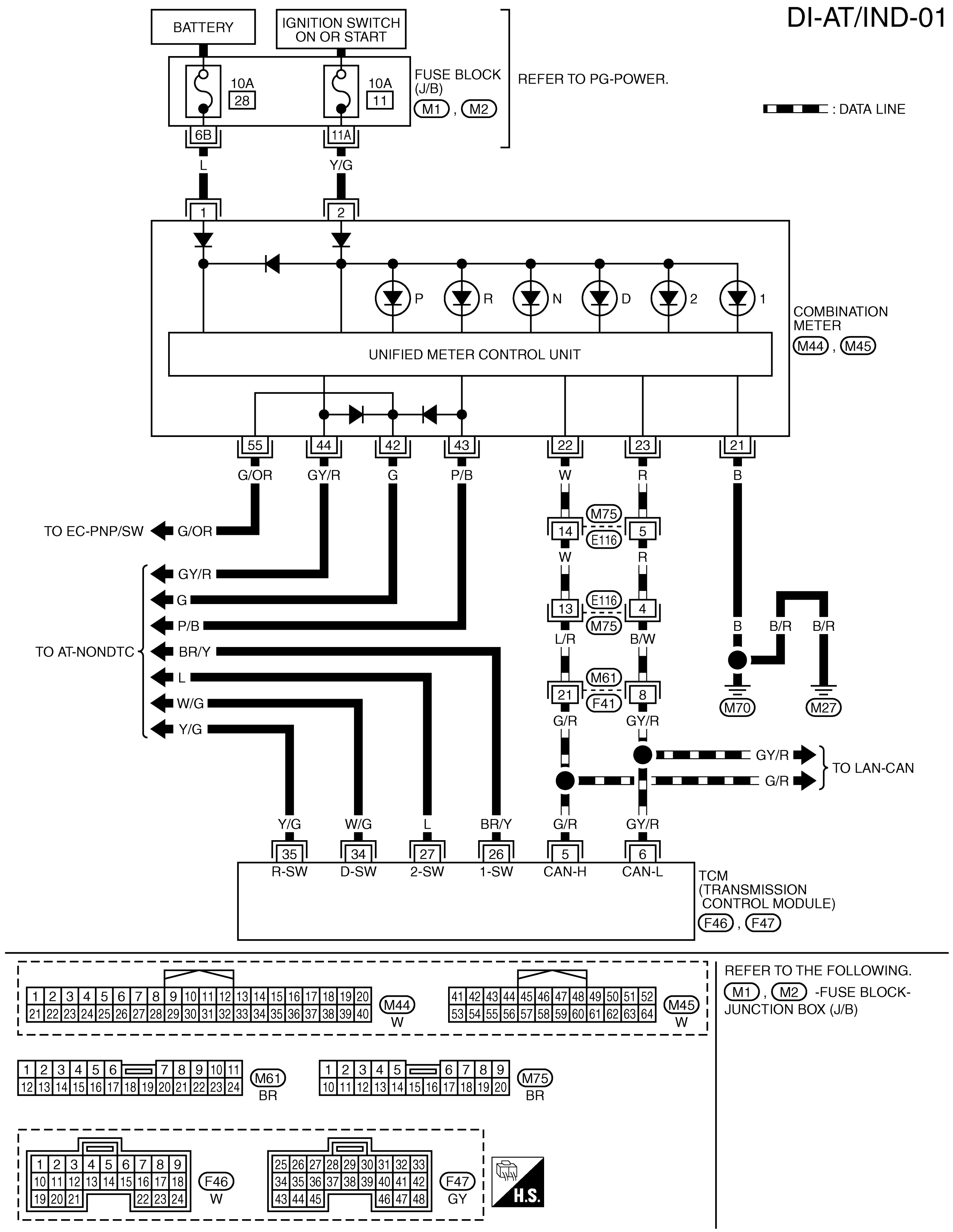


A B C D E F G H I J DI L M

## 2WD MODELS

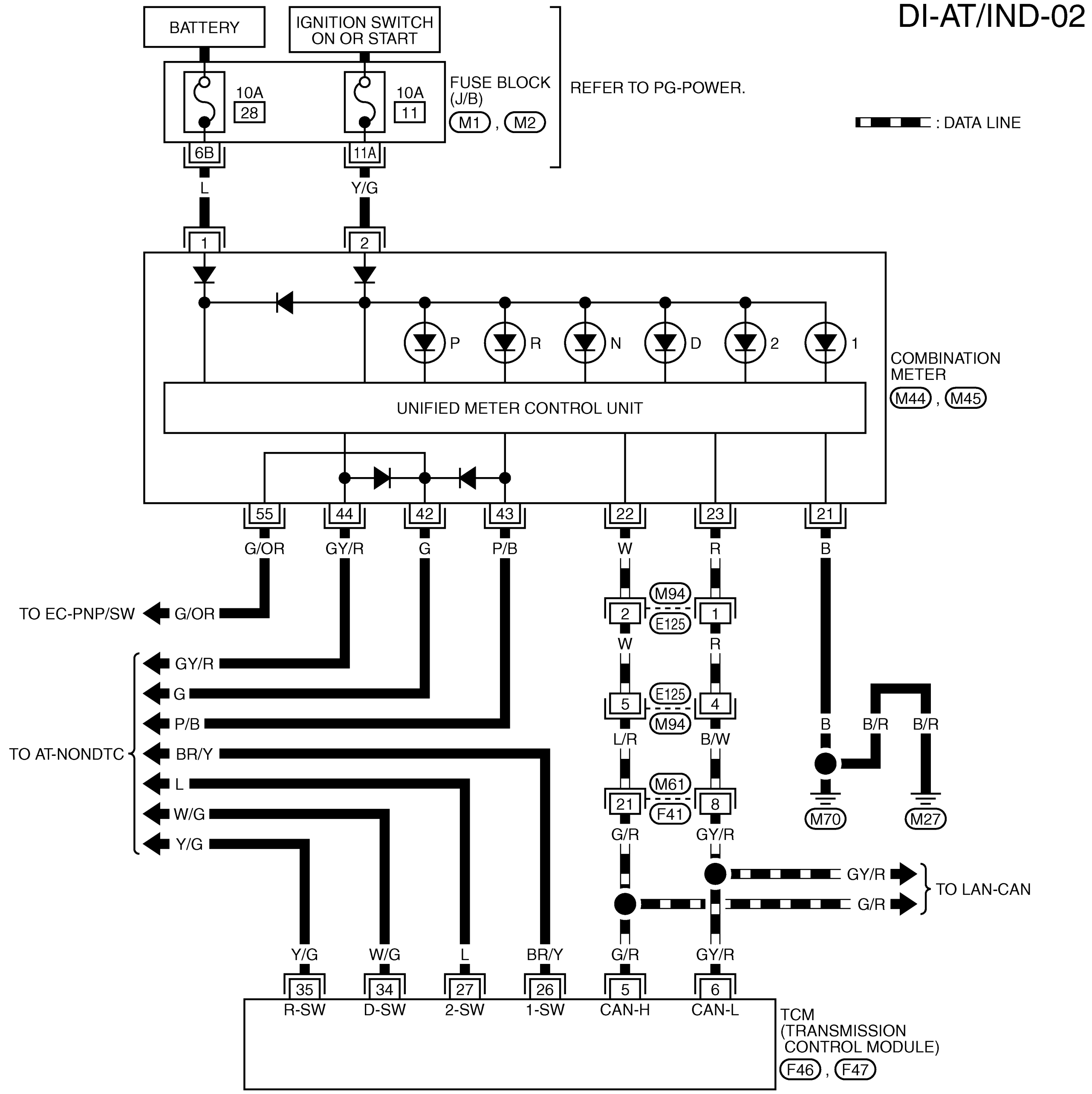


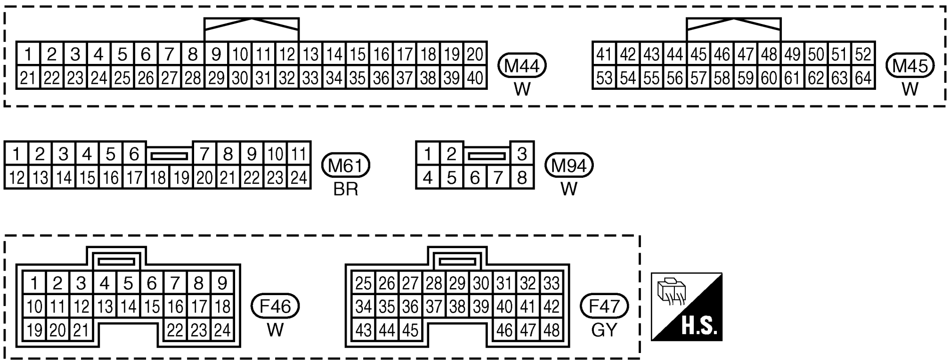


REFER TO THE FOLLOWING.
M1, M2 -FUSE BLOCK-JUNCTION BOX (J/B)

TKWA1851E

## A/T Indicator Does Not Illuminate

AKS00BAX

### 1. CHECK TCM SELF-DIAGNOSIS

Perform TCM self-diagnosis. Refer to AT-80, "CONSULT-II" .

OK or NG

OK >> Replace combination meter.
NG >> Go to TCM trouble diagnosis.

# WARNING CHIME

PFP:28596

## System Description

AKS00BB4

The warning chime is controlled by the smart entrance control unit.
When a signal, or combination of signals, is received by the smart entrance control unit, the warning chime will sound.
The warning chime is located in the smart entrance control unit.

### POWER SUPPLY AND GROUND CIRCUIT

Power is supplied at all times

- through 10 A fuse [No. 26, located in the fuse block (J/B)]
- to smart entrance control unit terminal 49
- through 10 A fuse [No. 28, located in the fuse block (J/B)]
- to key switch terminal 1
- through 10 A fuse (No. 31, located in fuse and fusible link box)
- to combination switch terminal 11.

With ignition switch in ON or START position, power is supplied

- through 10 A fuse [No. 5, located in the fuse block (J/B)]
- to smart entrance control unit terminal 27.

Ground is supplied

- to smart entrance control unit terminals 43 and 64
- through grounds M27 and M70.

### IGNITION KEY WARNING CHIME

With key is inserted in the ignition key cylinder (OFF or ACC position), and the driver door open, the warning chime will sound.
Power is supplied as a signal

- through key switch terminal 2
- to smart entrance control unit terminal 25

Ground is supplied as a signal

- from front door switch (driver side) terminal 2
- to smart entrance control unit terminal 1.

Front door switch (driver side) terminal 3 is grounded through grounds B8 and B18.

### LIGHT WARNING CHIME

With ignition switch in OFF or ACC position, driver door open and lighting switch in 1st or 2nd position, warning chime will sound.
Power is supplied as a signal

- through lighting switch terminal 12
- to smart entrance control unit terminal 58.

Ground is supplied as a signal

- from front door switch (driver side) terminal 2
- to smart entrance control unit terminal 1.

Front door switch (driver side) terminal 3 is grounded through grounds B8 and B18.

### SEAT BELT WARNING CHIME

With ignition switch turned ON and seat belt unfastened [seat belt buckle switch (driver side) ON], warning chime will sound for approximately 6 seconds.

#### Without Power Seat

Ground is supplied as a signal

- from seat belt buckle switch (driver side) terminal 1
- to smart entrance control unit terminal 28.

Seat belt buckle switch (driver side) terminal 2 is grounded through grounds B8 and B18.

### With Power Seat

Ground is supplied as a signal

- from seat belt buckle switch (driver side) terminal 13
- to smart entrance control unit terminal 28.

Seat belt buckle switch (driver side) terminal 14 is grounded through grounds B8 and B18.

## Component Parts and Harness Connector Location

AKS00BLS

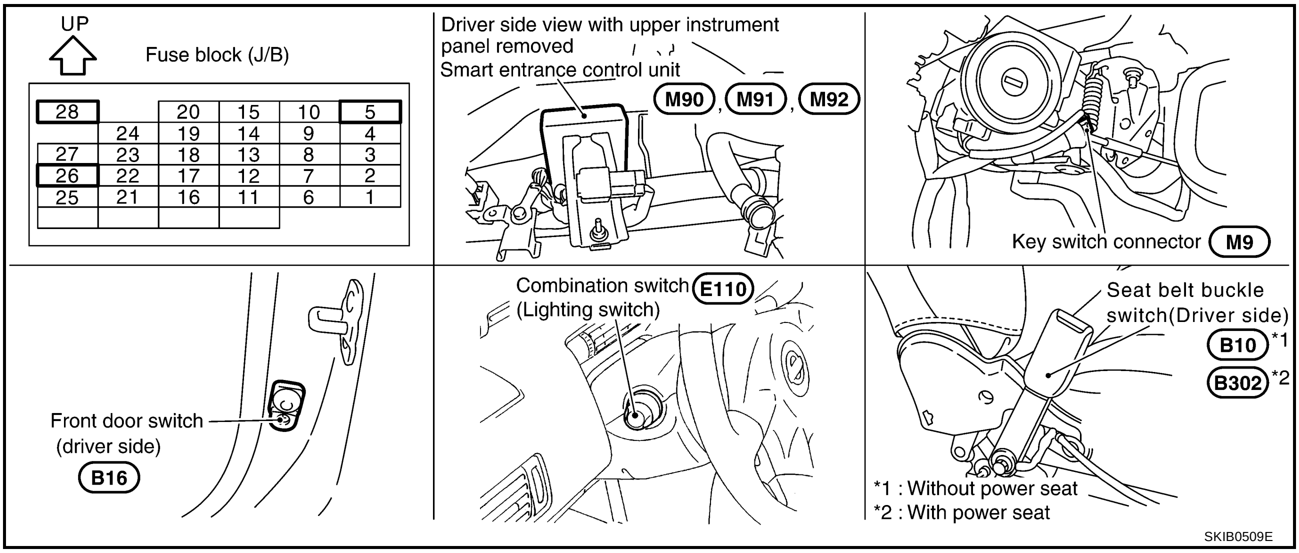

## Schematic

AKS00C35

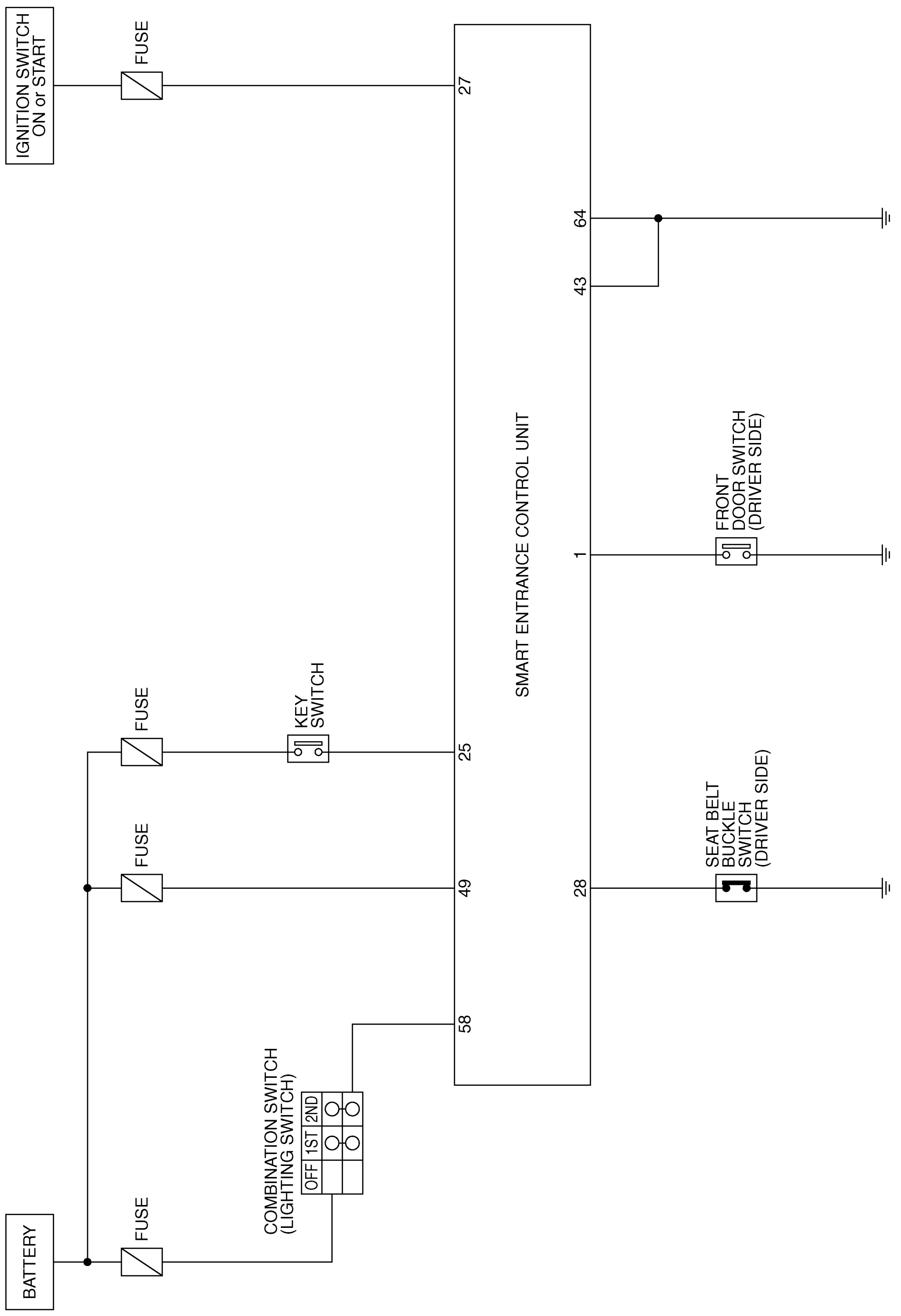


TKWB0269E

## Wiring Diagram — CHIME —

AKS00BB5

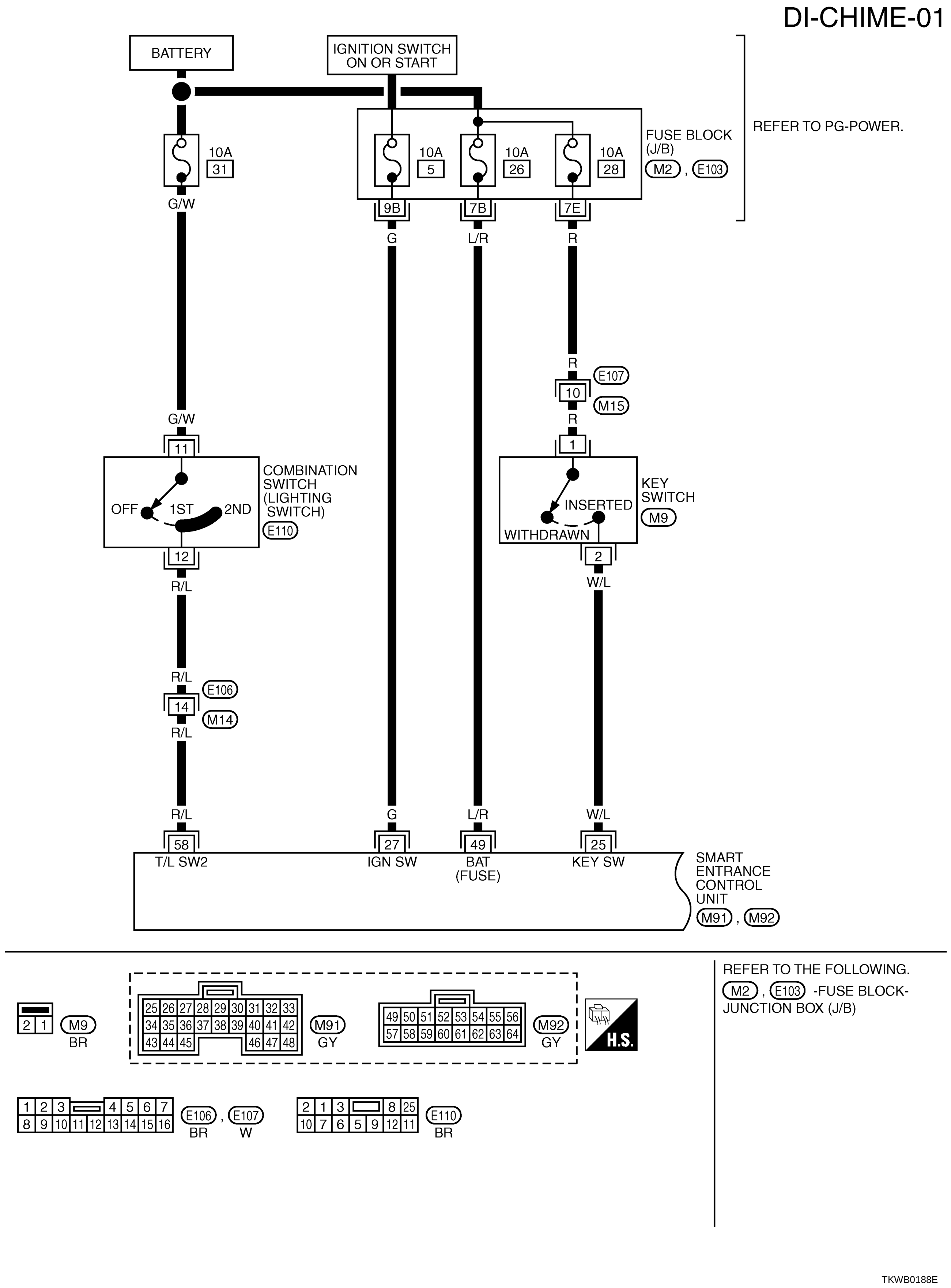

DI-CHIME-02

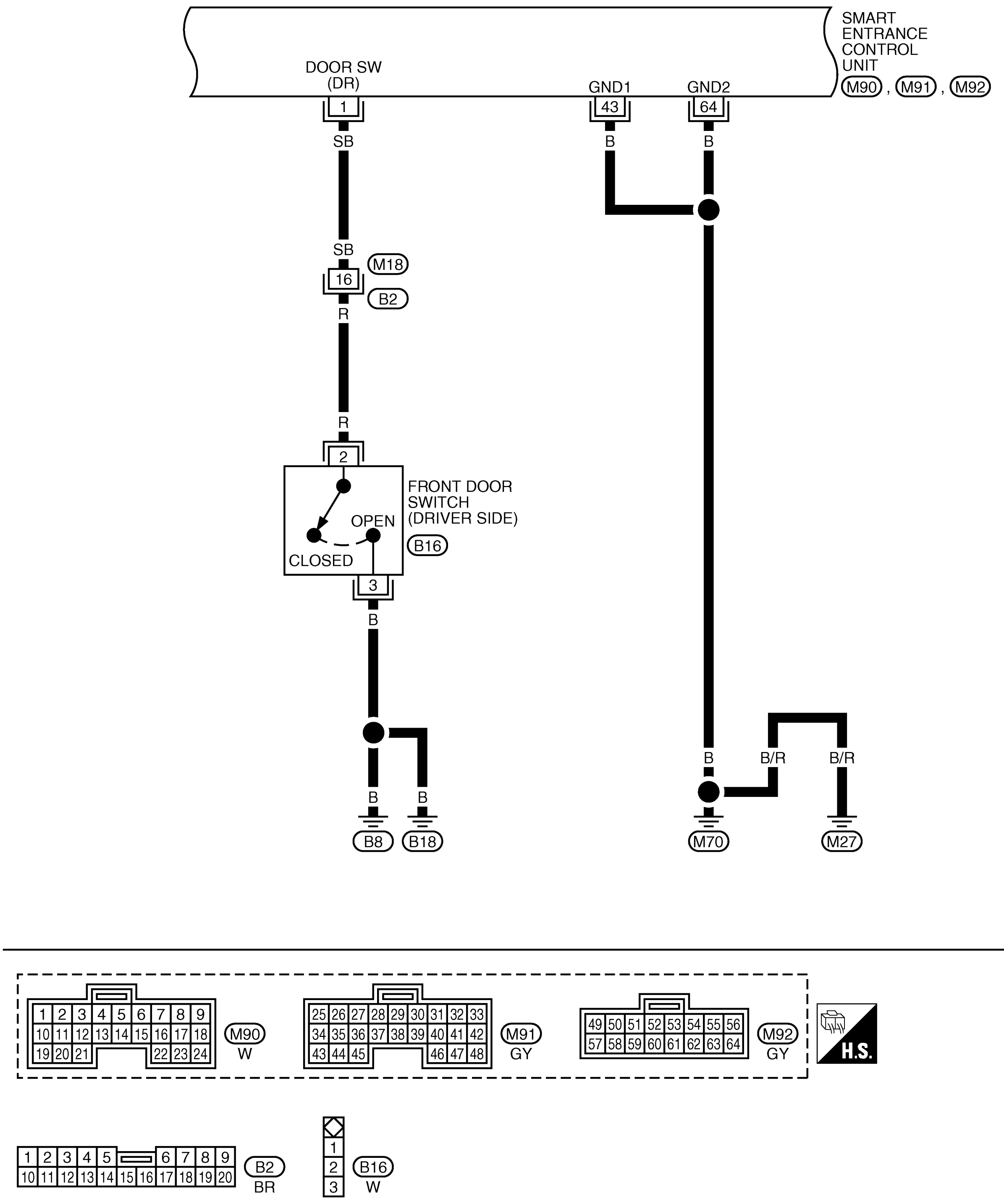


TKWB0189E

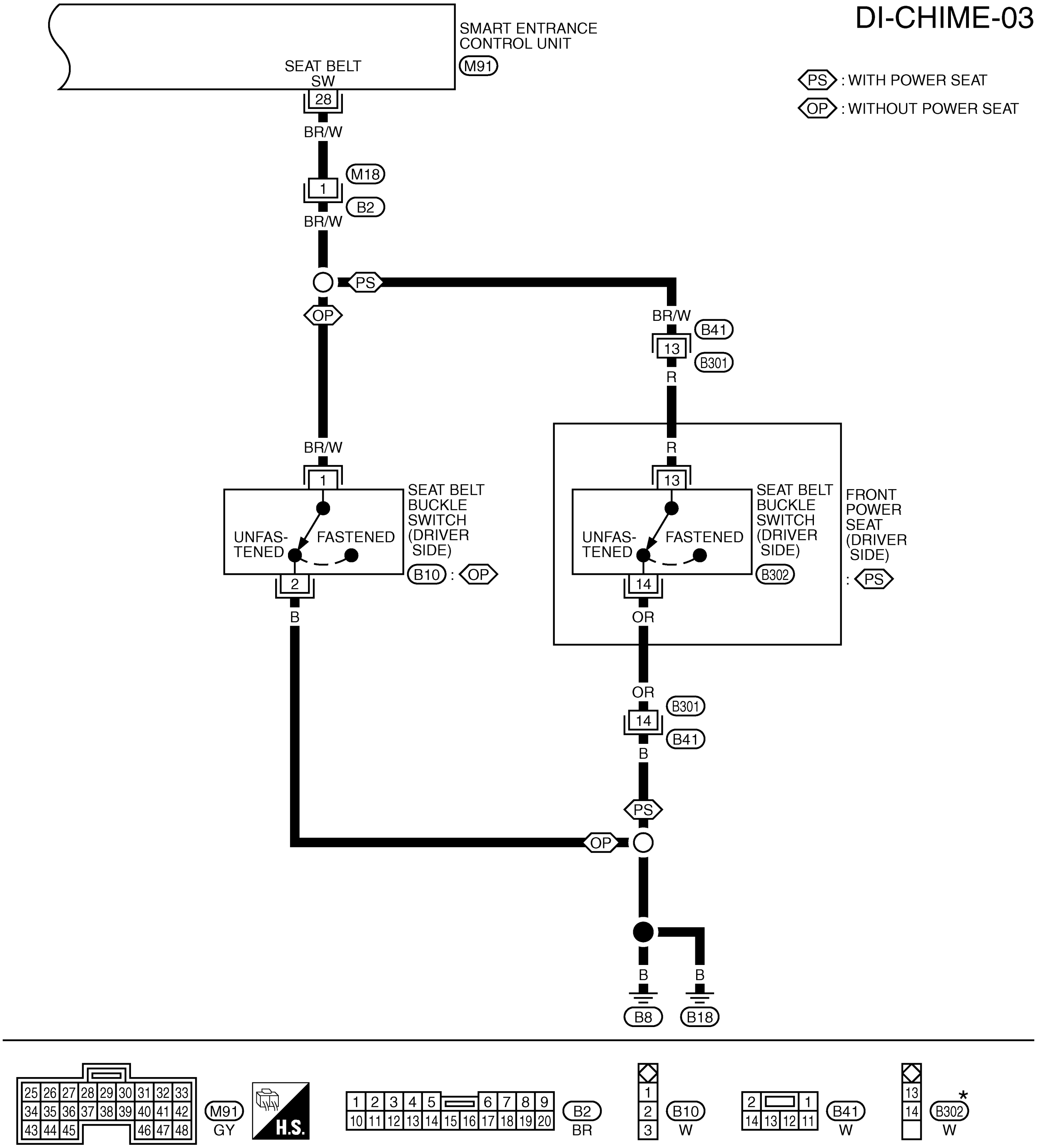


*: THIS CONNECTOR IS NOT SHOWN IN "HARNESS LAYOUT", PG SECTION.

TKWB0270E

## Terminals and Reference Value for Smart Entrance Control Unit

AKS00BQR

| Terminal No. | Wire color | Item | Condition | | | Reference values (Approximate values) |
|---|---|---|---|---|---|---|
| | | | Ignition switch | Operation | | |
| 1 | SB | Front door switch (Driver side) | OFF | Front door (driver side) | Closed | 12 V |
| | | | | | Open | 0 V |
| 25 | W/L | Key switch (Insert) | OFF | Key inserted | | 12 V |
| | | | | Key removed from ignition key cylinder | | 0 V |
| 27 | G | Ignition switch (ON) | ON | — | | Battery voltage |
| 28 | BR/W | Seat belt buckle switch (Driver side) | ON | Seat belt buckle | Unfastened | 0 V |
| | | | | | Fastened | 12 V |
| 43 | B | Ground | ON | — | | 0 V |
| 49 | L/R | Power source (Fuse) | OFF | — | | Battery voltage |
| 58 | R/L | Lighting switch | OFF | Lighting switch is 1ST or 2ND positions | | 12 V |
| | | | | Lighting switch is OFF position | | 0 V |
| 64 | B | Ground | ON | — | | 0 V |

## Trouble Diagnosis

AKS00BQ8

### HOW TO PROCEED WITH TROUBLE DIAGNOSIS

1. Confirm the symptom and customer complaint.
2. Understand the outline of system. Refer to DI-42, "System Description" .
3. Referring to trouble diagnosis chart, repair or replace the cause of the malfunction. Refer to DI-48, "SYMPTOM CHART" .
4. Does warning chime system operate normally? If it operates normally, GO TO 5. If not, GO TO 3.
5. INSPECTION END

### SYMPTOM CHART

| Symptom | Diagnoses/Service procedure | Reference page |
|---|---|---|
| All warning chimes do not activate. | Power supply and ground circuit Inspection | DI-48 |
| | If above systems are OK, replace smart entrance control unit | — |
| Light warning chime and key warning chime does not activate (Seat belt warning chime does activate) | Front door switch (driver side) Inspection | DI-49 |
| | If above systems are OK, replace smart entrance control unit | — |
| Light warning chime does not activate. | Lighting switch input signal Inspection | DI-51 |
| | If above systems are OK, replace smart entrance control unit | — |
| Key warning chime does not activate. | Key switch insert signal Inspection | DI-51 |
| | If above systems are OK, replace smart entrance control unit | — |
| Seat belt warning chime does not activate | Seat belt buckle switch input signal Inspection [without power seat] | DI-52 |
| | Seat belt buckle switch input signal Inspection [with power seat] | DI-54 |
| | If above systems are OK, replace smart entrance control unit | — |

## Power Supply and Ground Circuit Inspection

AKS00BB8

### 1. CHECK FUSE

Check for blown smart entrance control unit fuses. Refer to PG-49, "FUSE BLOCK - JUNCTION BOX (J/B)" .

| Unit | Power source | Fuse No. |
|---|---|---|
| Smart entrance control unit | Battery | 26 |
| | Ignition switch (ON) | 5 |

OK or NG

OK >> GO TO 2.
NG >> If fuse is blown, be sure to eliminate cause of malfunction before installing new fuse.

## 2. CHECK POWER SUPPLY CIRCUIT

Check voltage between smart entrance control unit and ground.

| Terminals | | | Ignition switch position | |
|---|---|---|---|---|
| (+) | | (–) | OFF | ON |
| Connector | Terminal (Wire color) | | | |
| M92 | 49 (L/R) | Ground | Battery voltage | Battery voltage |
| M91 | 27 (G) | | 0 V | Battery voltage |

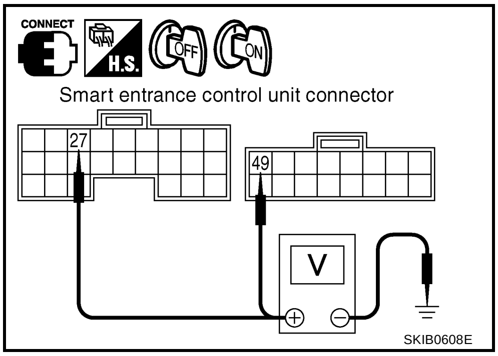


OK or NG

OK >> GO TO 3.
NG >> Check harness between fuse and smart entrance control unit.

## 3. CHECK GROUND CIRCUIT

1. Turn ignition switch OFF.
2. Disconnect smart entrance control unit connector.
3. Check continuity between smart entrance control unit harness connector M91 terminal 43 (B) and ground.

**43 (B) – Ground : Continuity should exist.**

4. Check continuity between smart entrance control unit harness connector M92 terminal 64 (B) and ground.

**64 (B) – Ground : Continuity should exist.**

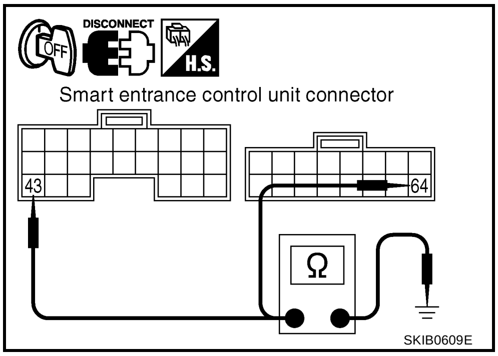


OK or NG

OK >> Power supply and ground circuit are OK.
NG >> Repair ground harness.

# Front Door Switch (Driver Side) Inspection

AKS00BB9

## 1. CHECK DOOR SWITCH INPUT SIGNAL

1. Turn ignition switch OFF.
2. Check voltage between smart entrance control unit harness connector M90 terminal 1 (SB) and ground.

**1 (SB) – Ground**
**When driver door is opened : Approx. 0 V**
**When driver door is closed : Approx. 12 V**

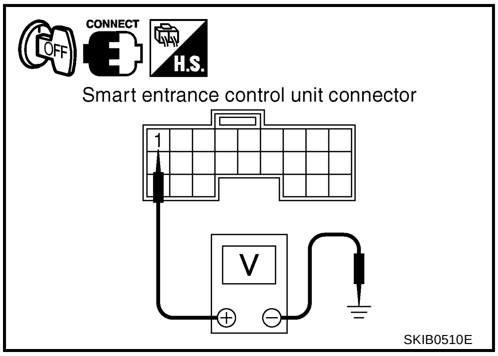


OK or NG

OK >> Front door switch (driver side) is OK.
NG >> GO TO 2.

## 2. CHECK FRONT DOOR SWITCH (DRIVER SIDE)

1. Disconnect front door switch (driver side) connector.
2. Check continuity between front door switch (driver side) B16 terminals 2 and 3.

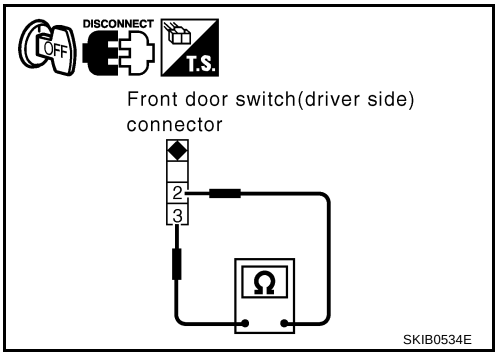


**2 – 3**

| | |
|---|---|
| **When door switch is released** | **: Continuity should exist.** |
| **When door switch is pushed** | **: Continuity should not exist.** |

OK or NG

OK >> GO TO 3.
NG >> Replace front door switch (driver side).

## 3. CHECK FRONT DOOR SWITCH CIRCUIT

1. Disconnect smart entrance control unit connector.
2. Check continuity between smart entrance control unit harness connector M90 terminal 1 (SB) and front door switch (driver side) harness connector B16 terminal 2 (R).

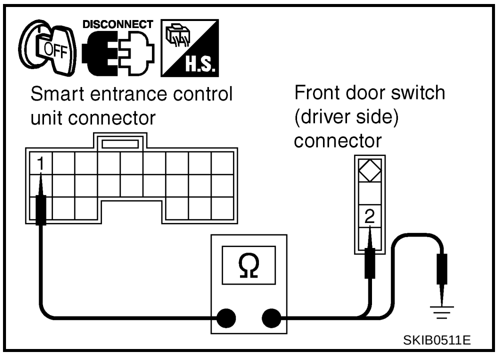


**1 (SB) – 2 (R) : Continuity should exist.**

3. Check continuity between smart entrance control unit harness connector M90 terminal 1 (SB) and ground.

**1 (SB) – Ground : Continuity should not exist.**

OK or NG

OK >> GO TO 4.
NG >> Repair harness or connector.

## 4. CHECK FRONT DOOR SWITCH GROUND CIRCUIT

Check continuity between front door switch (driver side) harness connector B16 terminal 3 (B) and ground.

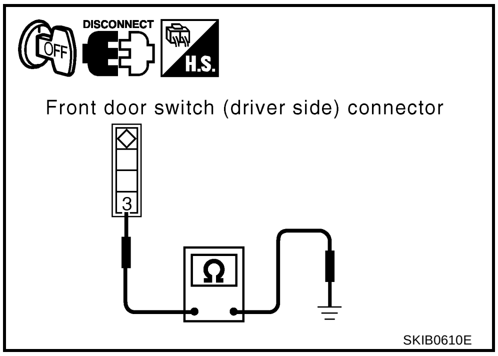


**3 (B) – Ground : Continuity should exist.**

OK or NG

OK >> Replace smart entrance control unit.
NG >> Repair harness or connector.

## Lighting Switch Input Signal Inspection

AKS00BBA

### 1. CHECK LIGHTING SWITCH INPUT SIGNAL

1. Turn ignition switch OFF.
2. Check voltage between smart entrance control unit harness connector M92 terminal 58 (R/L) and ground.

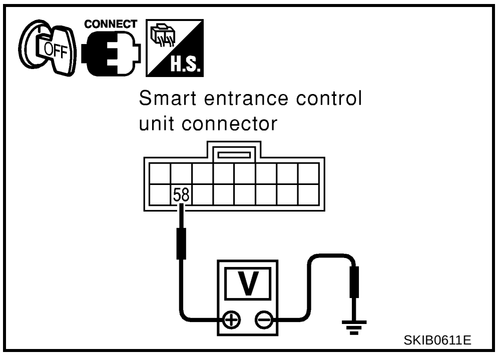


**58 (R/L) – Ground**

**Lighting switch (1st or 2nd position) : Approx. 12 V**

**Lighting switch (OFF) : Approx. 0 V**

OK or NG

OK >> Lighting switch is OK.
NG >> GO TO 2.

### 2. CHECK LIGHTING SWITCH CIRCUIT

1. Disconnect smart entrance control unit connector and combination switch connector.
2. Check continuity between smart entrance control unit harness connector M92 terminal 58 (R/L) and combination switch harness connector E110 terminal 12 (R/L).

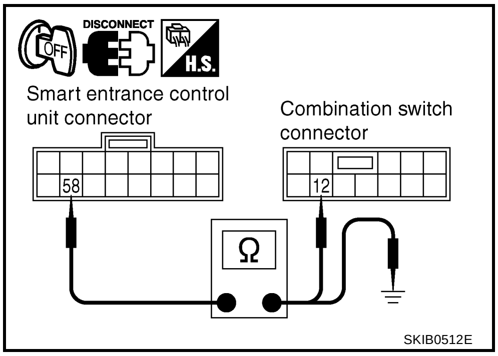


**58 (R/L) – 12 (R/L) : Continuity should exist.**

3. Check continuity between smart entrance control unit harness connector M92 terminal 58 (R/L) and ground.

**58 (R/L) – Ground : Continuity should not exist.**

OK or NG

OK >> Check combination switch. Refer to LT-42, "COMBINATION SWITCH" .
NG >> Repair harness or connector.

## Key Switch Insert Signal Inspection

AKS00BBB

### 1. CHECK FUSE

Check for blown key switch fuses. Refer to PG-49, "FUSE BLOCK - JUNCTION BOX (J/B)" .

| Unit | Power source | Fuse No. |
|---|---|---|
| Key switch | Battery | 28 |

OK or NG

OK >> GO TO 2.
NG >> If fuse is blown, be sure to eliminate cause of malfunction before installing new fuse.

### 2. CHECK KEY SWITCH INPUT SIGNAL

Check voltage between smart entrance control unit harness connector M91 terminal 25 (W/L) and ground.

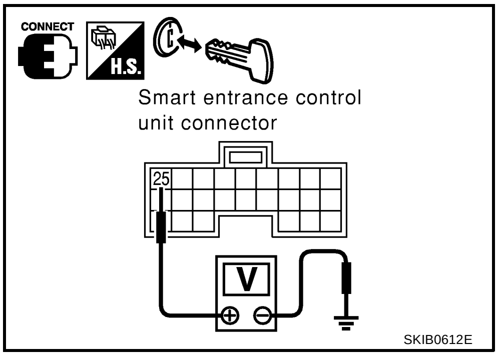


**25 (W/L) – Ground**

**When key is inserted to ignition key cylinder : Approx. 12 V**

**When key is removed from ignition key cylinder : Approx. 0 V**

OK or NG

OK >> Key switch is OK.
NG >> GO TO 3.

## 3. CHECK KEY SWITCH (INSERT)

1. Disconnect key switch connector.
2. Check continuity between key switch connector M9 terminals 1 and 2.

**1 – 2**

| | |
|---|---|
| **When key is inserted to ignition key cylinder** | **: Continuity should exist.** |
| **When key is removed from ignition key cylinder** | **: Continuity should not exist.** |

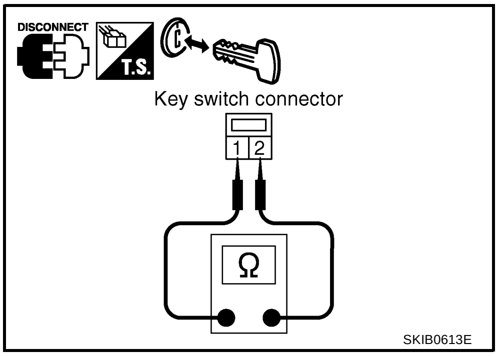

SKIB0613E

OK or NG

OK >> GO TO 4.
NG >> Replace key switch.

## 4. CHECK KEY SWITCH CIRCUIT

1. Disconnect smart entrance control unit connector.
2. Check continuity between smart entrance control unit harness connector M91 terminal 25 (W/L) and key switch harness connector M9 terminal 2 (W/L).

**25 (W/L) – 2 (W/L) : Continuity should exist.**

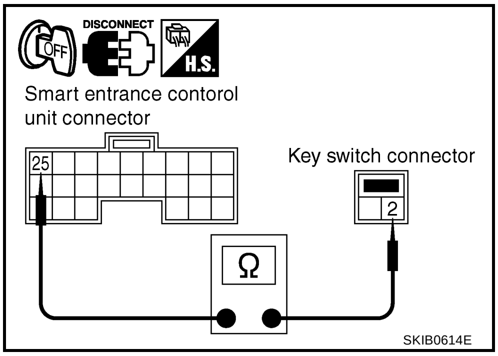

SKIB0614E

OK or NG

OK >> Check continuity open between key switch and fuse.
NG >> Repair harness or connector.

# Seat Belt Buckle Switch Input Signal Inspection [Without Power Seat]

*AKS00BQK*

## 1. CHECK SEAT BELT BUCKLE SWITCH INPUT SIGNAL

1. Turn ignition switch ON.
2. Check voltage between smart entrance control unit harness connector M91 terminal 28 (BR/W) and ground.

**28 (BR/W) – Ground**

| | |
|---|---|
| **When seat belt is fastened** | **: Approx. 12 V** |
| **When seat belt is unfastened** | **: Approx. 0 V** |

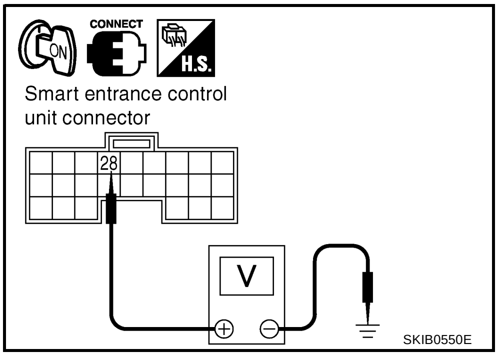

SKIB0550E

OK or NG

OK >> Seat belt buckle switch is OK.
NG >> GO TO 2.

## 2. CHECK SEAT BELT BUCKLE SWITCH

1. Turn ignition switch OFF.
2. Disconnect seat belt buckle switch (driver side) connector.
3. Check continuity seat belt buckle switch (driver side) connector terminals 1 and 2.

**1 – 2**

| | |
|---|---|
| **When seat belt is fastened** | **: Continuity should not exist.** |
| **When seat belt is unfastened** | **: Continuity should exist.** |

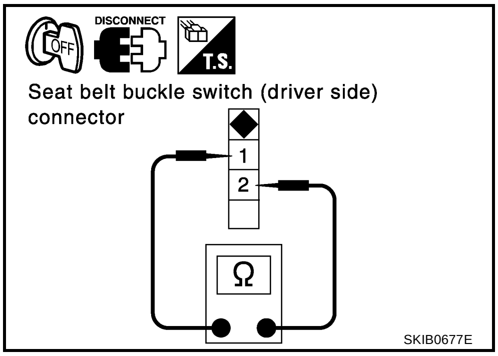


OK or NG

OK >> GO TO 3.
NG >> Replace seat belt buckle switch (driver side).

## 3. CHECK SEAT BELT BUCKLE SWITCH CIRCUIT

1. Disconnect smart entrance control unit connector.
2. Check continuity between smart entrance control unit harness connector M91 terminal 28 (BR/W) and seat belt buckle switch (driver side) harness connector B10 terminal 1 (BR/W).

   **28 (BR/W) – 1 (BR/W) : Continuity should exist.**

3. Check continuity between smart entrance control unit harness connector M91 terminal 28 (BR/W) and ground.

   **28 (BR/W) – Ground : Continuity should not exist.**

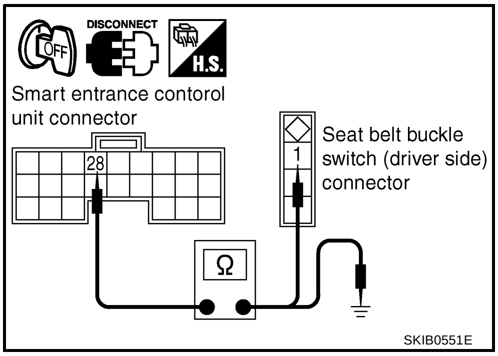


OK or NG

OK >> GO TO 4.
NG >> Repair harness or connector.

## 4. CHECK SEAT BELT BUCKLE SWITCH GROUND CIRCUIT

Check continuity between seat belt buckle switch (driver side) harness connector B10 terminal 2 (B) and ground.

**2 (B) – Ground : Continuity should exist.**

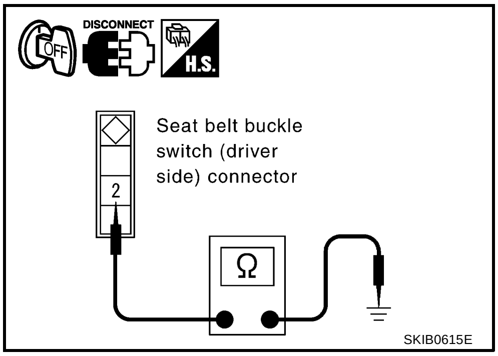


OK or NG

OK >> Replace smart entrance control unit.
NG >> Repair harness or connector.

## Seat Belt Buckle Switch Input Signal Inspection [With Power Seat]

AKS00BQL

### 1. CHECK SEAT BELT BUCKLE SWITCH INPUT SIGNAL

1. Turn ignition switch ON.
2. Check voltage between smart entrance control unit harness connector M91 terminal 28 (BR/W) and ground.

**28 (BR/W) – Ground**

| | |
|---|---|
| **When seat belt is fastened** | **: Approx. 12 V** |
| **When seat belt is unfastened** | **: Approx. 0 V** |

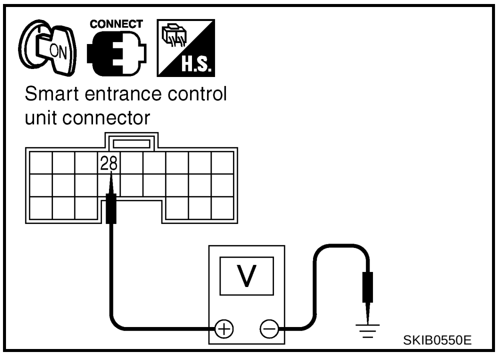


OK or NG

OK >> Seat belt buckle switch is OK.
NG >> GO TO 2.

### 2. CHECK SEAT BELT BUCKLE SWITCH

1. Turn ignition switch OFF.
2. Disconnect seat belt buckle switch (driver side) connector.
3. Check continuity seat belt buckle switch (driver side) connector terminals 13 and 14.

**13 – 14**

| | |
|---|---|
| **When seat belt is fastened** | **: Continuity should not exist.** |
| **When seat belt is unfastened** | **: Continuity should exist.** |

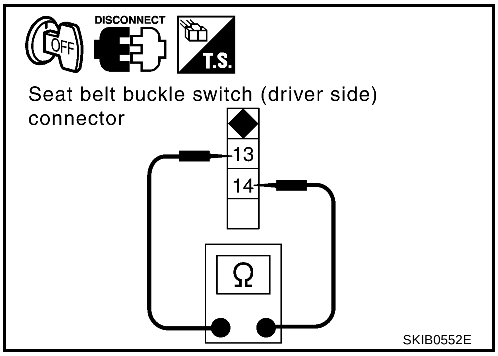


OK or NG

OK >> GO TO 3.
NG >> Replace seat belt buckle switch (driver side).

### 3. CHECK SEAT BELT BUCKLE SWITCH CIRCUIT

1. Disconnect smart entrance control unit connector.
2. Check continuity between smart entrance control unit harness connector M91 terminal 28 (BR/W) and seat belt buckle switch (driver side) harness connector B302 terminal 13 (R).

**28 (BR/W) – 13 (R) : Continuity should exist.**

3. Check continuity between smart entrance control unit harness connector M91 terminal 28 (BR/W) and ground.

**28 (BR/W) – Ground : Continuity should not exist.**

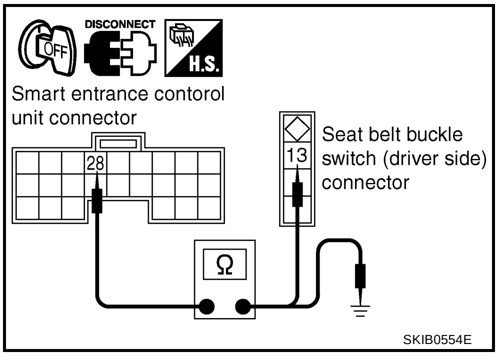


OK or NG

OK >> GO TO 4.
NG >> Repair harness or connector.

## 4. CHECK SEAT BELT BUCKLE SWITCH GROUND CIRCUIT

Check continuity between seat belt buckle switch (driver side) harness connector B302 terminal 14 (OR) and ground.

**14 (OR) – Ground : Continuity should exist.**

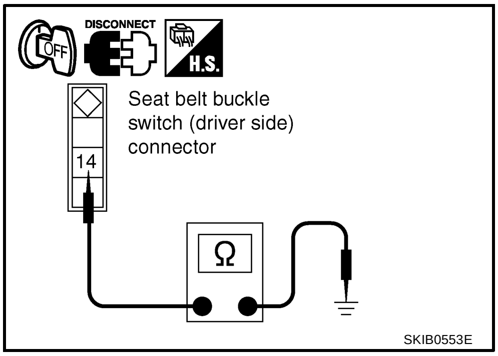


OK or NG

OK >> Replace smart entrance control unit.
NG >> Repair harness or connector.

# CLOCK

PFP:25820

## Wiring Diagram — CLOCK —

AKS00BBC

DI-CLOCK-01

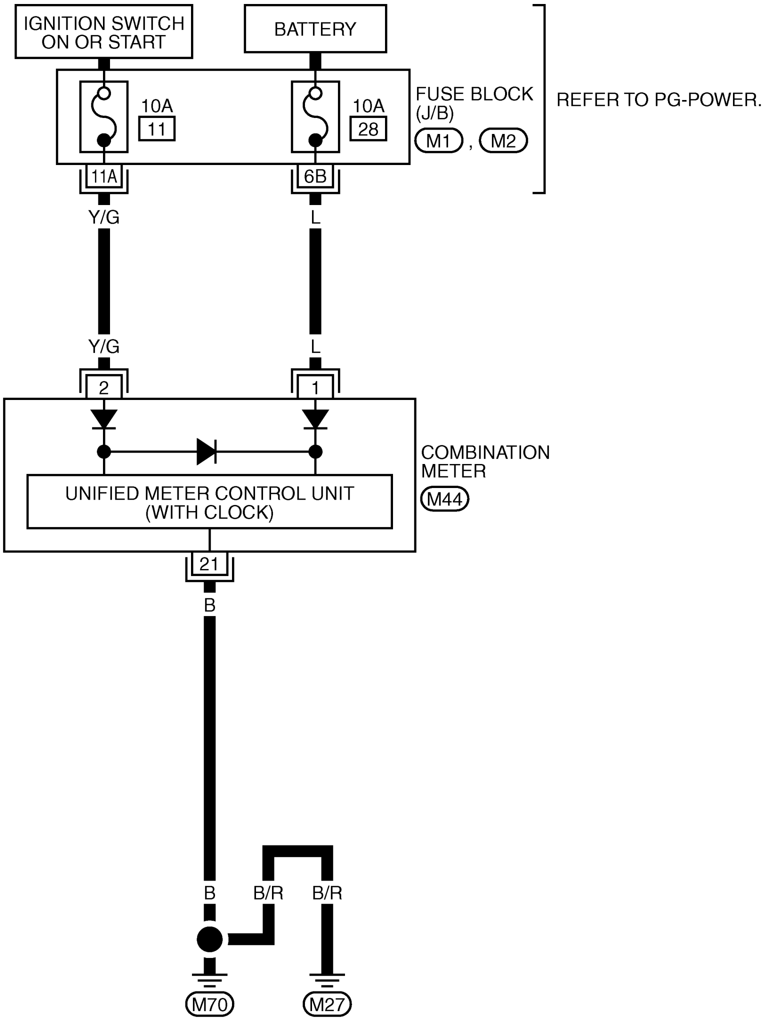


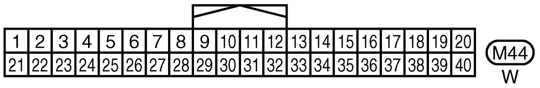


REFER TO THE FOLLOWING.
M1 , M2 -FUSE BLOCK-
JUNCTION BOX (J/B)

TKWA1859E